P-40

TECHNICAL MANUAL

TABLE OF CONTENTS

CHAPTER 1.	GENERAL DESCRIPTION
CHAPTER 2.	HOW TO OPERATE THE PRINTER
CHAPTER 3.	PRINCIPLES OF OPERATION
CHAPTER 4.	DISASSEMBLY/ASSEMBLY AND ADJUSTMENT
CHAPTER 5.	TROUBLESHOOTING
CHAPTER 6.	MAINTENANCE
CHAPTER 7.	P-40 LEASED LINE

APPENDIX DIAGRAM

PREFACE

This technical manual describes the principle of mechanical and electrical operations, as well as maintenance and repair procedures, of the EPSON P-40 Dot Matrix Printer.
Chapter 1 deals with the general specifications.
Chapter 2 deals with the operation mode.
Chapter 3 deals with the principle of P-40.
Chapter 4 through 6 deal with the fundamental troubleshooting, maintenance and repair of P-40.
Chapter 7 deals with the P-40 leased line.
For detail on disassembly, assembly, troubleshooting and maintenance of the Model-1210 Printer Mechanism, refer to the separately published "Technical Manual of EPSON Model-1210".

REVISION STATUS

REVISION	ISSUED DATE	CHANGE DOCUMENT
A	October 5, 1984	1st issue

CHAPTER 1
GENERAL DESCRIPTION

1.1 Features Of P-40 1-1
1.2 General Specifications 1-1
1.2.1 Printing Functions 1-1
1.2.2 Paper 1-2
1.2.3 Power 1-2
1.2.4 Durability 1-2
1.2.5 Environmental Conditions 1-2
1.2.6 External Dimensions & Weight 1-3
1.3 Main Components 1-5
1.4 Hardware Subassemblies 1-6
1.5 System Signal Flow 1-7

LIST OF FIGURES

1-1 External Dimensions of the P-40S 1-4
1-2 System Components 1-5
1-3 Rear View of the P-40S Case 1-5
1-4 Construction of the P40S 1-6
1-5 Power-On Operation Sequence 1-8

1.1 Features Of P-40

The P-40 is a compact printer which uses a thermal printhead and special temperature-sensitive roll paper to print 40 columns of standard (5 × 9) characters at approximately 2 seconds per line. In condensed mode, the printer will produce an 80 column line, and bit-mapped graphics may be programmed to a maximum density of 480 columns per line using control codes similar to those applicable to Espon's MX series printers. Four character modes (standard, enlarged, condensed, and emphasized) and two graphics densities (single and dual) are standard features of the printer, and the 11 built-in international character sets may be selected by programming. In addition, the character coding specifications used by the printer may be changed by exchanging the character generator ROM. The printhead is user replacable, and should be changed when the print quality becomes faint or distorted.

Although usually operated using the AC adaptor, the low power consumption CMOS ICs controlling printer operation enable the unit to be run on batteries for 1 hour of continuous printing or 4 hours at standby. These batteries are charged while the printer is connected to an AC outlet; to prevent overcharging it is important to turn the unit off when not in use.

1.2 General Specifications

1.2.1 Printing Functions

1) Printing system — Thermal sensitive serial dot matrix
2) Printing direction — Uni-directional (left to right)
3) Printing speed

	40-column mode	80-column mode
Normal	45 (CPS)	40 (CPS)
Enlarged	22.5	45
Condensed 1	40	—
Condensed 2	34	—
Emphasized	20	20

4) Paper feed — Friction feed
5) Line spacing — 1/6" or 1/9"
6) Line feed speed — About 1.2 lines/sec. (1/6" spacing)
7) No. of columns per line

	40-column mode	80-column mode
Normal	40 (CPL)	80 (CPL)
Enlarged	20	40
Condensed 1	80	—
Condensed 2	72	—

8) Character sets

ASCII	95 characters
Graphics	32
Int'l char. set	32 (96 characters including KANA)

9) Character font — 5×9 font (text mode)
6×8 font (graphics mode)

10) Character sizes (W × H)

	40-column mode	80-column mode
Normal	1.7 × 2.4 mm	0.9 × 2.4 mm
Enlarged	3.5 × 2.4	1.7 × 2.4
Condensed 1	0.9 × 2.4	–
Condensed 2	0.9 × 2.4	–
Emphasized	1.8 × 2.4	1.8 × 2.4

1.2.2 Paper

(1) Brand: EPSON Thermal Roll Paper (P40TRP)
(2) Type: Thermal-sensitive roll paper (black)
(3) Paper width: 112^{+0}_{-1} mm
(4) Roll diameter: less than 30 mmϕ
(5) Roll length More than 11 m
(6) End mark: Single side end red indicator, 300 ± 100 mm from end

1.2.3 Power

(1) Built-in power supply: NiCd battery pack (C20RB)
(2) External power supply: AC adaptor
(3) Power consumption: 5 watts (during printing)
2 watts (during standby)
(4) Battery capacity: 5.9 to 3.2 V
(max. charge to discharge)
4.8 V/500 mA average
(5) Charging current: 150 mA max.
(6) Charging/Discharging Time: Approximately 6 hours charging
Discharges after 1 hour of continuous printing or 4 hours at standby (under normal conditions)

1.2.4 Reliability

(1) MCBF: 5×10^5 lines (excl. print head)
(2) Life of thermal head: 5×10^5 lines (40 lines, normal characters)
(3) Life of roll paper: 2,500 lines per roll

1.2.5 Environmental Conditions

1.2.5.1 Printer

(1) Temperature: Operation: 5°C ~ 35°C
Storage: −25°C ~ 65°C
(2) Humidity: Operation: 10% ~ 80% (non-condensing)
Storage: 5% ~ 95% (non-condensing)
(3) Shock resistance: Operation: 1G (within 1 msec.)
Storage: 2G (within 1 msec.)
(4) Vibration resistance: Operation: 0.25G, 55Hz (max.)
Storage: 0.5G, 55Hz (max.)

1.2.5.2 Thermal sensitive roll paper (P40TRP)

(1) Storage

Temperature: 0°C ~ 40°C

Humidity: 5% ~ 95% (non-condensing)

(2) Long-term storage

Temperature: 0°C ~ 30°C

Humidity: 30% ~ 85% (non-condensing)

1.2.6 External Dimensions & Weight

1.2.6.1 Printer

Dimensions: 46(H) × 216(W) × 128(D)mm

Weight: 650 g (excl. roll paper)

1.2.6.2 Roll paper

Weight: 60 g

1.2.6.3 AC adaptor

Weight: 210 g

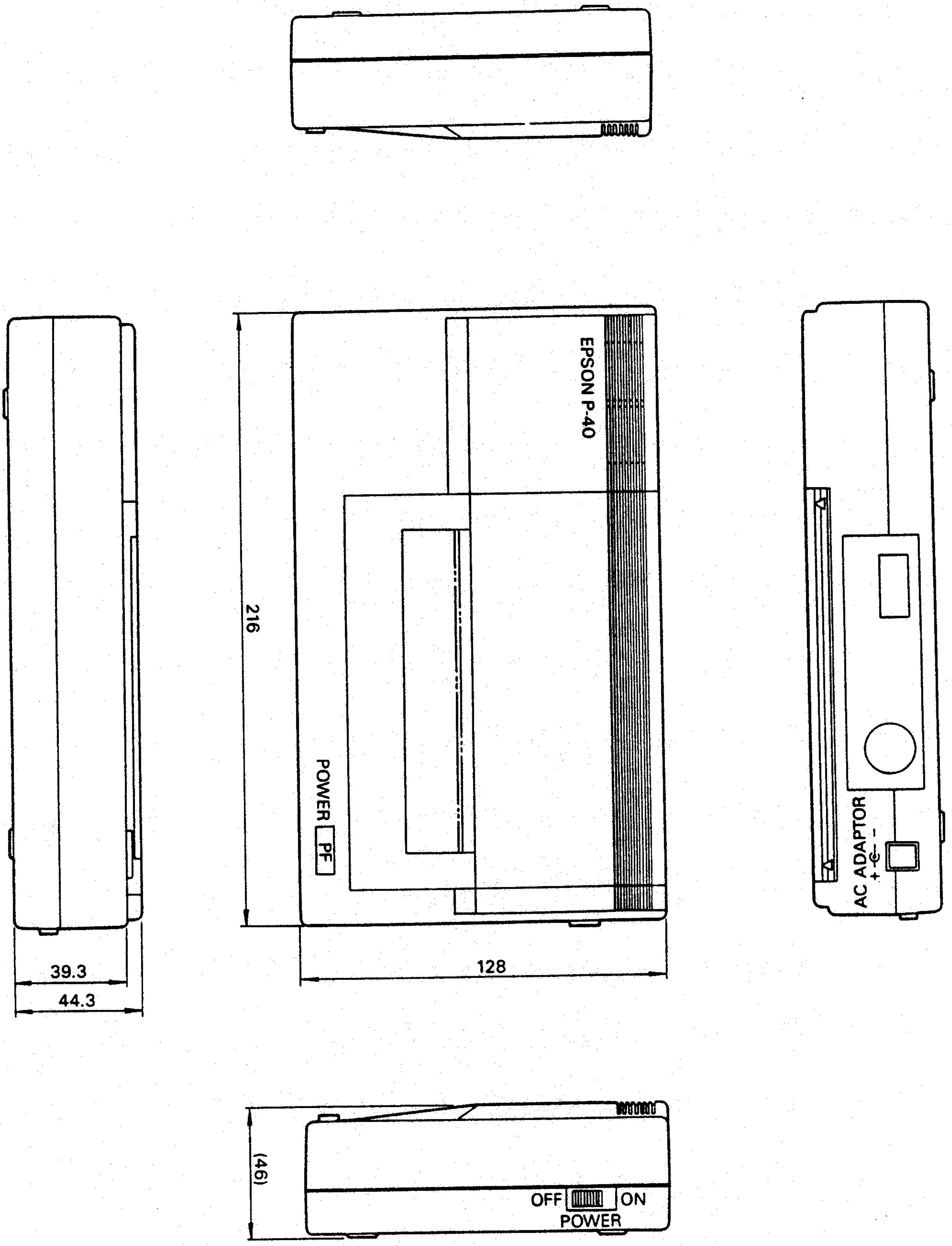

Fig. 1-1 External Dimensions of the P-40S Unit: mm

1.3 Main Components

The P-40 is constructed so that the main unit, shown in Figure 1-2, can be operated using local service voltages by connecting one of the nine available AC adaptors to port [1], shown in Fugure 1-3. Port [2] is used for connecting the serial cable required as an interface between the standard RS-232C I/O port of the host and the non-standard P-40S serial interface.

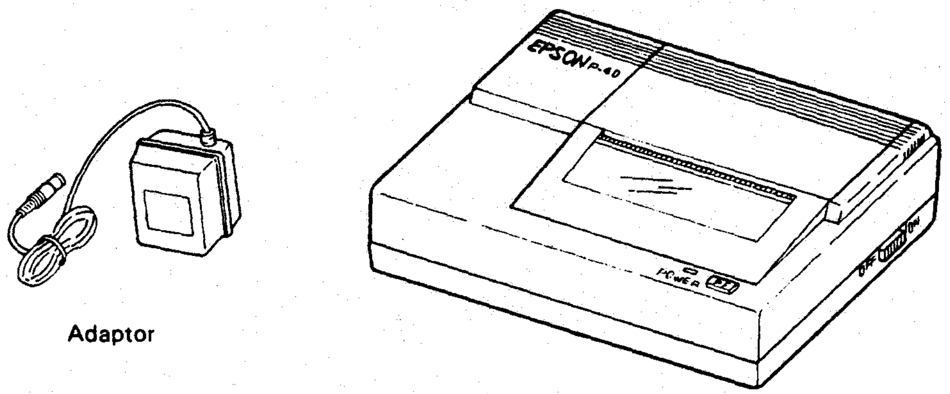

Fig. 1-2 System Component

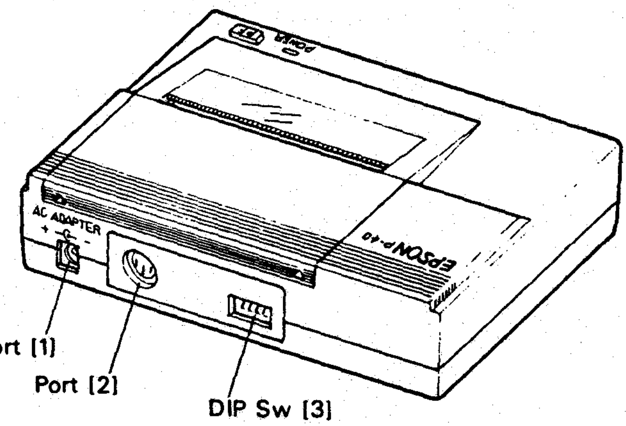

Fig. 1-3 Rear View of the P-40S Case

The cable alters three signal lines, as described in Table 1-1, and may be up to 15 meters long. DIP switch [3] is used to establish the parameters for serial communication, as described in Table 1-2, and must be set to correspond with serial output from the computer. (Settings for special P-40 models are included in Chapter 7.)

Table 1-1 Cable Connections for The P-40S

DIN 6P	P-40S		RS-232C		HX-20	PX-4,PX-8
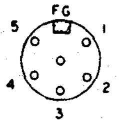	FG	FG	FG	1	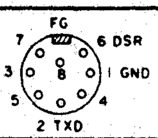	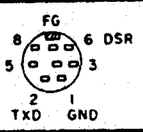
	2	DTR	DSR	6		
	3	RXD	TXD	2		
	4	GND	S.G	7		

Table 1-2 Switch Settings

NO.	Functions	ON	OFF	At the shipment time
1	Automatic paper feeding following CR	Enabled	Disabled	OFF
2	Parity check	Enabled	Disabled	OFF
3	EVEN/ODD parity selection	Even	Odd	OFF
4	Word length selection	7 bits	8 bits	OFF

5	ON	ON	ON	ON	ON	ON	ON	ON	O	O	O	O	OFF
6	ON	ON	ON	ON	O	O	O	O	ON	ON	ON	ON	ON
7	ON	ON	O	O	ON	ON	O	O	ON	ON	O	O	OFF
8	ON	O	ON	O	ON	O	ON	O	ON	O	ON	O	ON
	75	110	134.5	150	200	300	600	1200	1800	2400	4800	9600	
	Bit rate BIT/SEC (O mark=OFF)												

1.4 Hardware Subassemblies

The internal components of the printer are the M-1210 printer mechanism, the control board and the battery, shown in Figure 1-4. The cases and printer mechanism are made of plastic; the upper case includes the interface cover and a small dust cover, and the mechanism is constructed so that the thermal head is easily removed. The CPU and ROM are socketted on the printed circuit board.

Fig. 1-4 shows the construction of the P-40S.
The cases and the M-1210 mechanism are made of plastic.
Names of parts are:

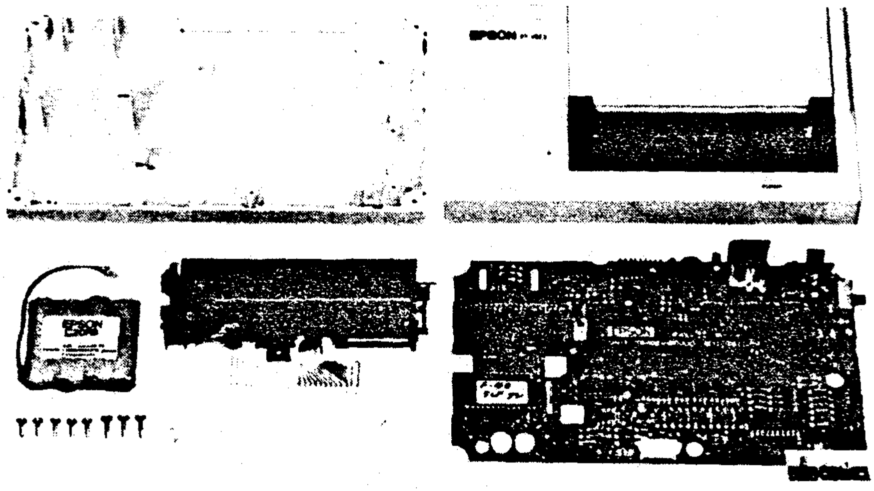

Fig. 1-4 Construction of the P-40S

<table>
<tr><td colspan="2">1</td><td>2</td></tr>
<tr><td>2</td><td>5</td><td rowspan="2">5</td></tr>
<tr><td colspan="2">6 7 8</td></tr>
</table>

1 Lower case
2 Upper case
3 Battery
4 M-1210 mechanism
5 Printed circuit board
6 Screws
7 Knobs
8 Interface cover

1.5 System Signal Flow

Printer operaton is described in Figure 1-5. When the power switch is turned on, the POWER LED on the upper case lights up, the carriage returns to the home position, and the printer automatically enters standby mode. If insufficient or abnormal voltage is received after power-up, printer operation is canceled. When in standby mode, the printer alternately checks the status of the paper feed switch and the data input port: the paper feed switch is operable only while the printer is at standby and no data is being received; as the printer begins receiving from the host the data is stored in the print buffer unitl the buffer is full or a carriage return or line feed code is received, at which time the data is printed and the printer returns to standby mode.

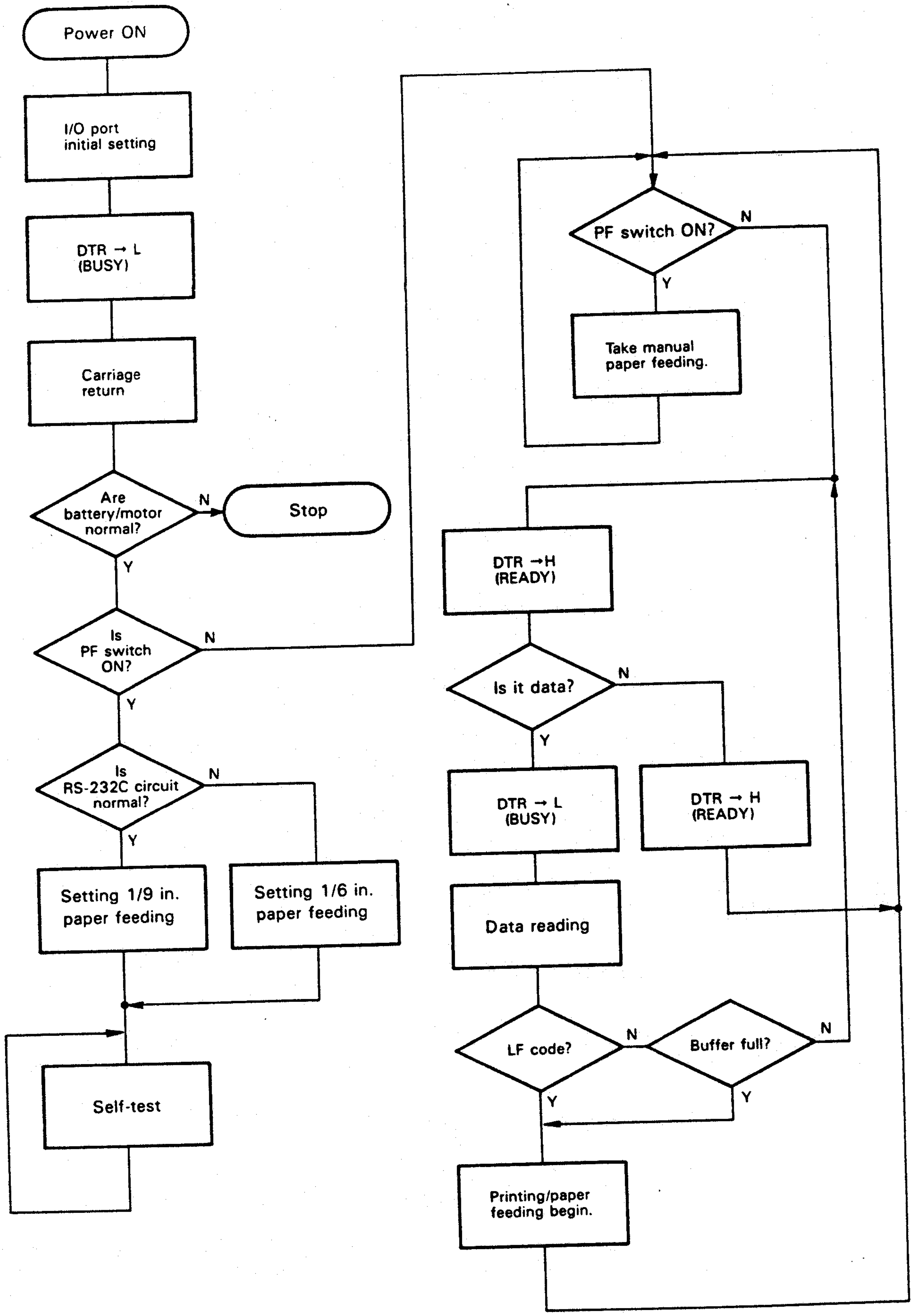

Fig. 1-5 Power-on Operation Sequence

CHAPTER 2
HOW TO OPERATE THE PRINTER

2.1 Power And Paper Feed Switches 2-1
2.2 Printing Mode Selection 2-2

LIST OF FIGURES

2-1 Printhead Firing Pattern 2-2
2-2 Control Codes for Text Mode 2-3
2-3 Control Codes for Bit-Image Mode 2-3
2-4 Control Codes for 80/72 Column Setting 2-4
2-5 Control Codes for Pitch Setting 2-4
2-6 Firmware Flowchart: Part 1 2-5
2-7 Firmware Flowchart: Part 2 2-6
2-8 Firmware Flowchart: Part 3 2-7
2-9 Firmware Flowchart: Part 4 2-8
2-10 Firmware Flowchart: Part 5 2-9
2-11 Firmware Flowchart: Part 6 2-10
2-12 Firmware Flowchart: Part 7 2-11
2-13 Firmware Flowchart: Part 8 2-12

2.1 Power And Paper Feed Switches

The upper case includes the power and paper feed switches and the power LED. The paper feed switch is used to initialize the self test.

Power: The power switch is a simple on/off toggle.
The battery may be recharged with the power on or off; however, do not leave the printer connected to power with the power switch off for more than 7 hours as this may overcharge the batteries and shorten their operating life.

Power LED: This LED lights up when the power is on, but will remain illuminated even if the battery voltage decreases and the printer stops working.

Paper Feed Switch: (Self Test) This switch is used to manually advance the paper, such as during installation. When the printer is off and this switch is held down while power is turned on again, the self test is initialized and the printer scrolls the character set currently in use and advances the paper 1/9 inch rather than the 1/6 inch standard paper feed. The power must be turned off to end the self test.

NOTE: Do not press the paper feed switch during printing as this may interrupt data reception.

Table 2-1 Paper Feeding

	2	3	4	5	6	7	A	B	C	D	E	F
0		0	@	P	`	p		0	@	P	`	p
1	!	1	A	Q	a	q	!	1	A	Q	a	q
2	"	2	B	R	b	r	"	2	B	R	b	r
3	#	3	C	S	c	s	#	3	C	S	c	s
4	$	4	D	T	d	t	$	4	D	T	d	t
5	%	5	E	U	e	u	%	5	E	U	e	u
6	&	6	F	V	f	v	&	6	F	V	f	v
7	'	7	G	W	g	w	'	7	G	W	g	w
8	(	8	H	X	h	x	(	8	H	X	h	x
9	)	9	I	Y	i	y	)	9	I	Y	i	y
A	*	:	J	Z	j	z	*	:	J	Z	j	z
B	+	;	K	[	k	{	+	;	K	[	k	{
C	,	<	L	\	l	¦	,	<	L	\	l	¦
D	-	=	M	]	m	}	-	=	M	]	m	}
E	.	>	N	^	n	~	.	>	N	^	n	~
F	/	?	O	_	o		/	?	O	_	o	

USA:	#	$	@	[	\	]	^	`	{	¦	}	~
FRA:	#	$	à	°	ç	§	^	`	é	ù	è	¨
GER:	#	$	§	Ä	Ö	Ü	^	`	ä	ö	ü	ß
U.K:	£	$	@	[	\	]	^	`	{	¦	}	~
DEN:	#	$	@	Æ	Ø	Å	^	`	æ	ø	å	~
SWE:	#	¤	É	Ä	Ö	Å	Ü	é	ä	ö	å	ü
ITA:	#	$	@	°	\	é	^	ù	à	ò	è	ì
SPA:	₧	$	@	¡	Ñ	¿	^	`	¨	ñ	}	~
JPN:	#	$	@	[	¥	]	^	`	{	¦	}	~

2.2 Printing Mode Selection

The four text modes (standard, emphasized, condensed, and enlarged), bit image mode, and single- or dual-strike printing are accessed by control code and may be mixed to produce a variety of fonts on a single line. In addition, condensed mode may be modified to print 72 characters per line with a two-dot space between characters, which produces text which is easier to read than regular condensed.

The printing parameters established at power-up are known as default settings. The P-40S default settings are: standard characters, 1/6 inch line feeds, and the ASCII character set (J2 ON). P-40S printers designed for special applications may default to different settings (see Chapter 7). The control codes used to print other than the default format are described in detail in the P-40S Operation Manual (Publication Number P8490028). The codes are flags, and may therefore be set at any point on the input line. Emphasized mode has priority over previously set flags. After printing emphasized text the printer will revert to the setting immediately prior to emphasized mode.

Any data can be printed in bit-image mode using ESC K, with a single-density image composed of 256 dots (DIP switch 7 ON) and a double-density image (DIP switch 7 OFF) composed of 480 dots. Once set, bit image mode will continue until all of the bit-imge data received has been printed. The printer will then return to the previous text setting. ESC L establishes bit-image printing of a single line of 480 dots. When text and bit-image modes are combined on a single line, the printer will accept a total of 480 dots of data.

The conversion of data bits to a printhead-wire firing pattern is shown in Figure 2-1. The 1 bits correspond to the printhead wires to be fired.

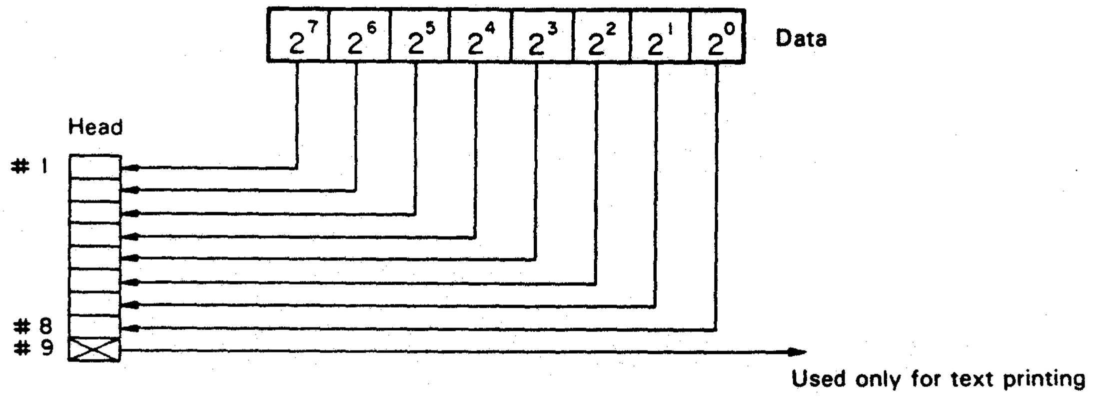

Fig. 2-1 Printhead Firing Pattern

Figures 2-2 through 2-5 show printer logic sequences for various print modes. The remaining flowcharts (Figures 2-6 through 2-13) show how control code relationships and print style priorities are handled by the firmware.

Text Mode

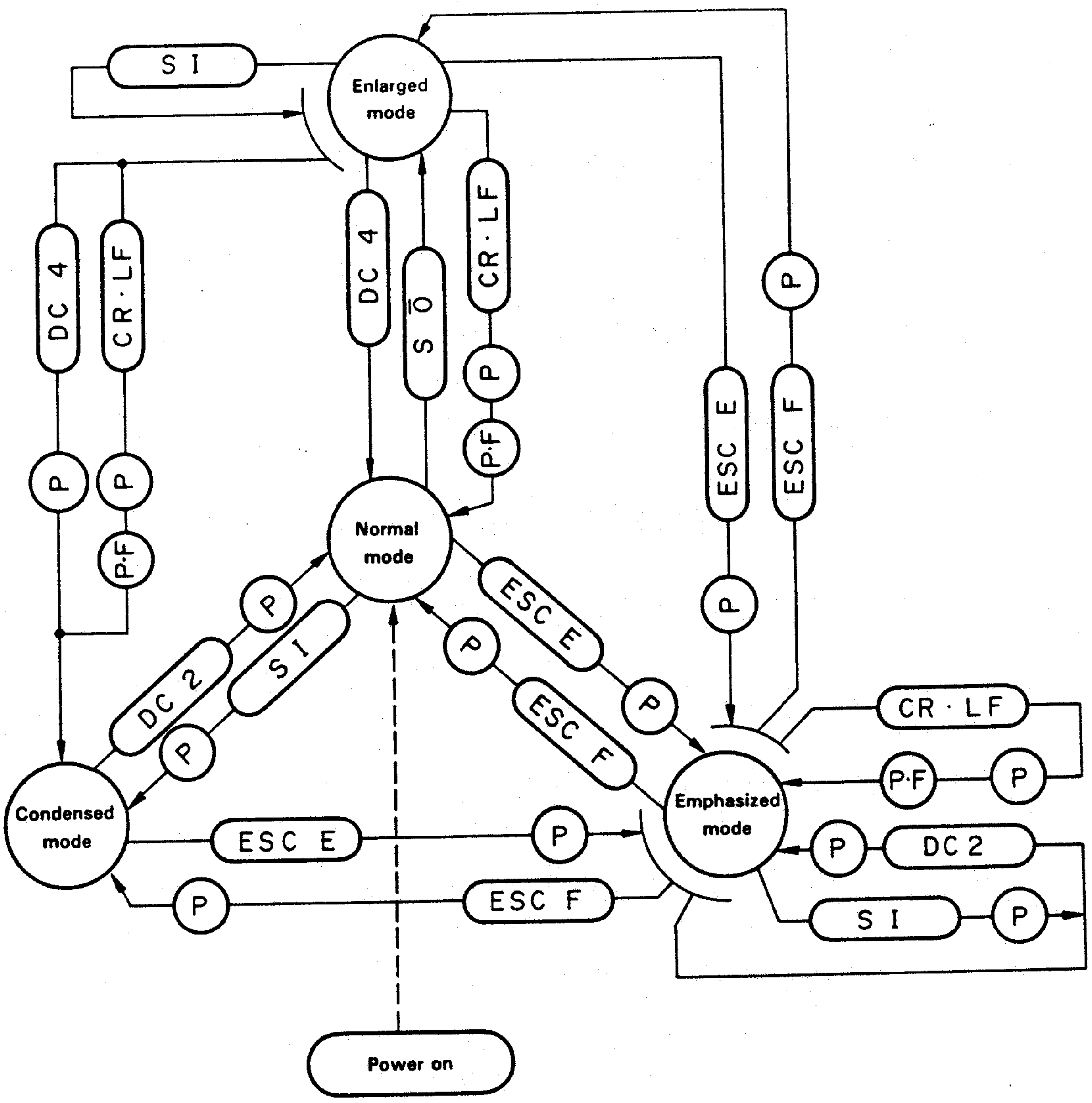

Fig. 2-2 Control Codes for Text Mode

Bit Image

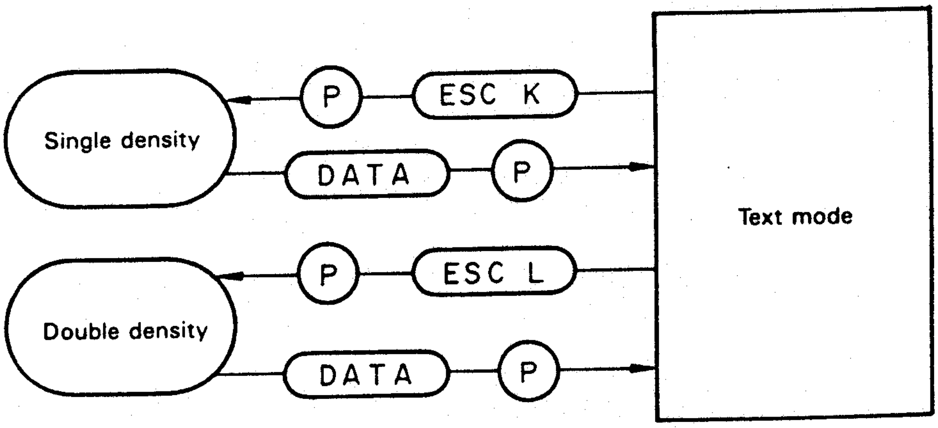

Fig. 2-3 Control Codes for Bit-image Mode

80/72 Column Setting

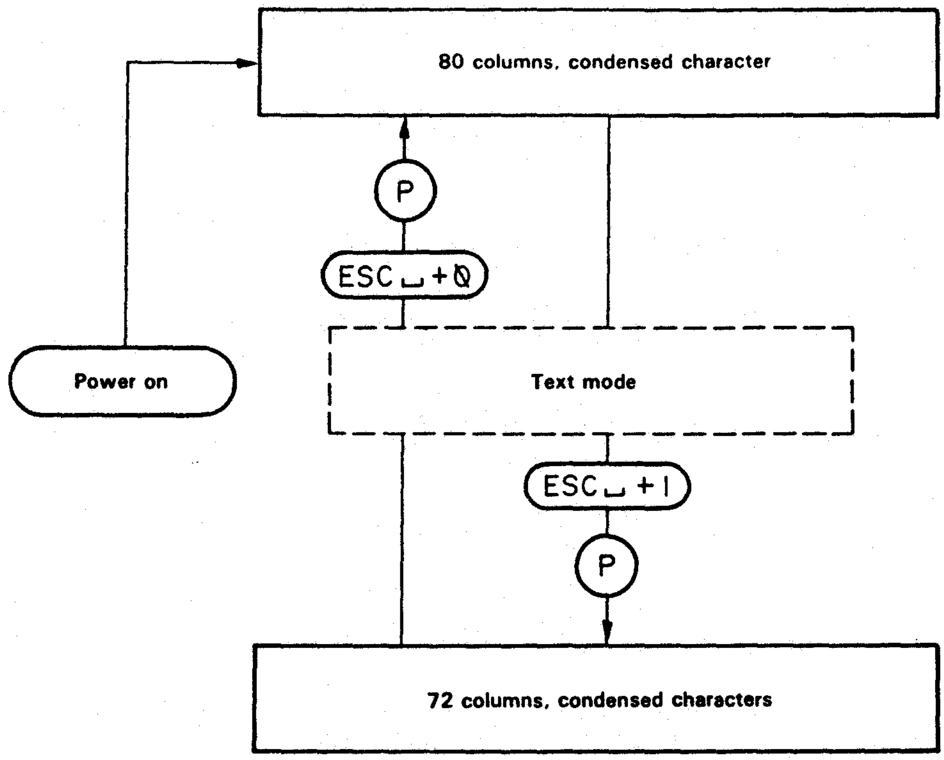

Fig. 2-4 Control Codes for 80/72 Column Setting

Paper Feeding Pitch Setting

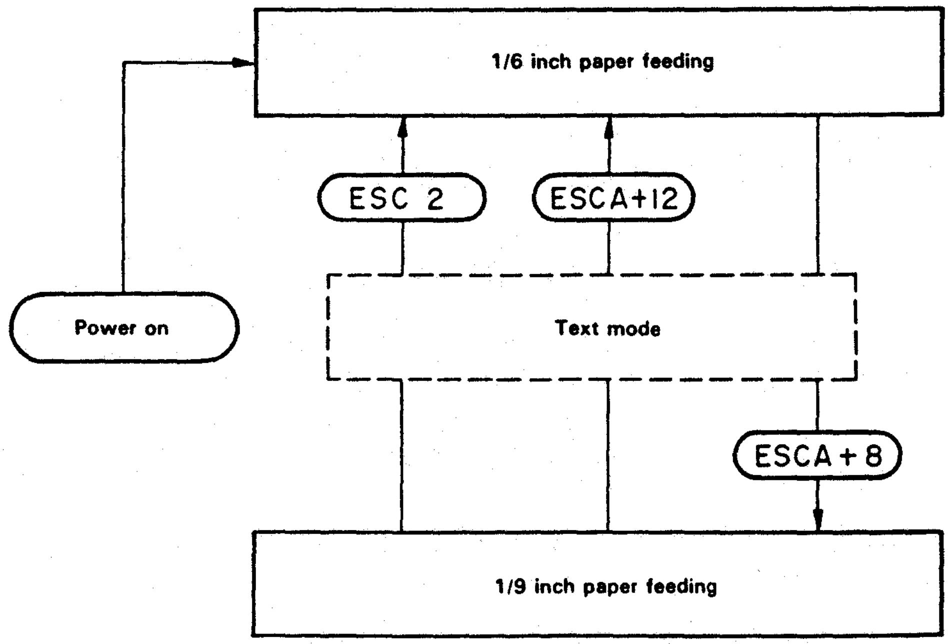

Fig. 2-5 Control Codes for Pitch Setting

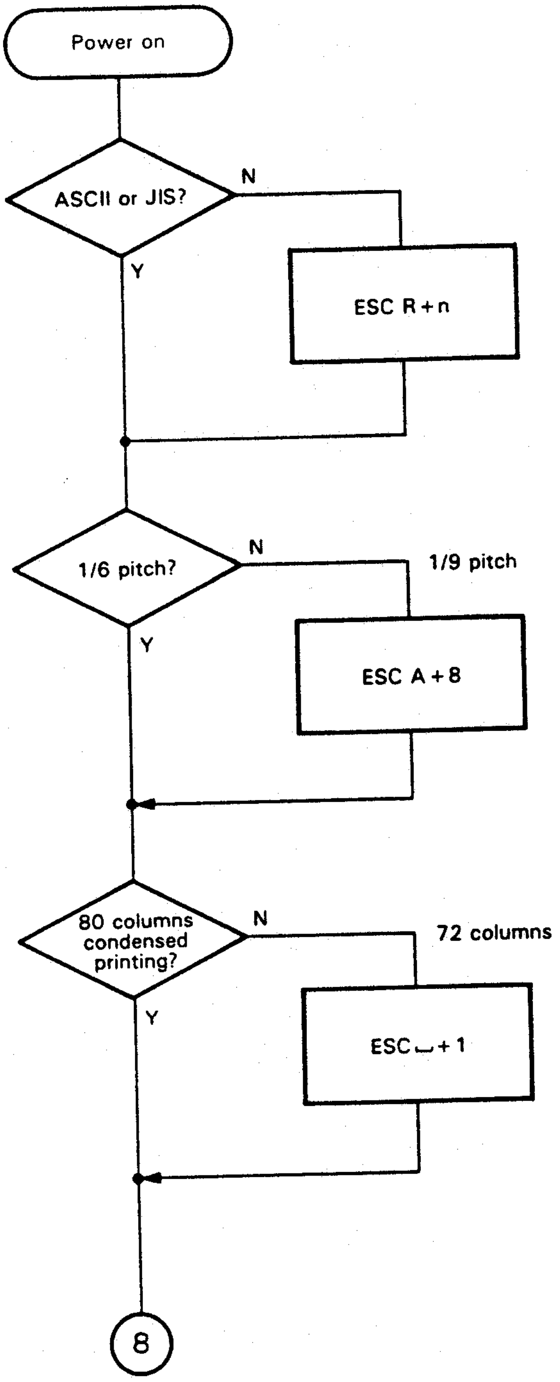

Fig. 2-6 Firmware Flowchart: Part 1

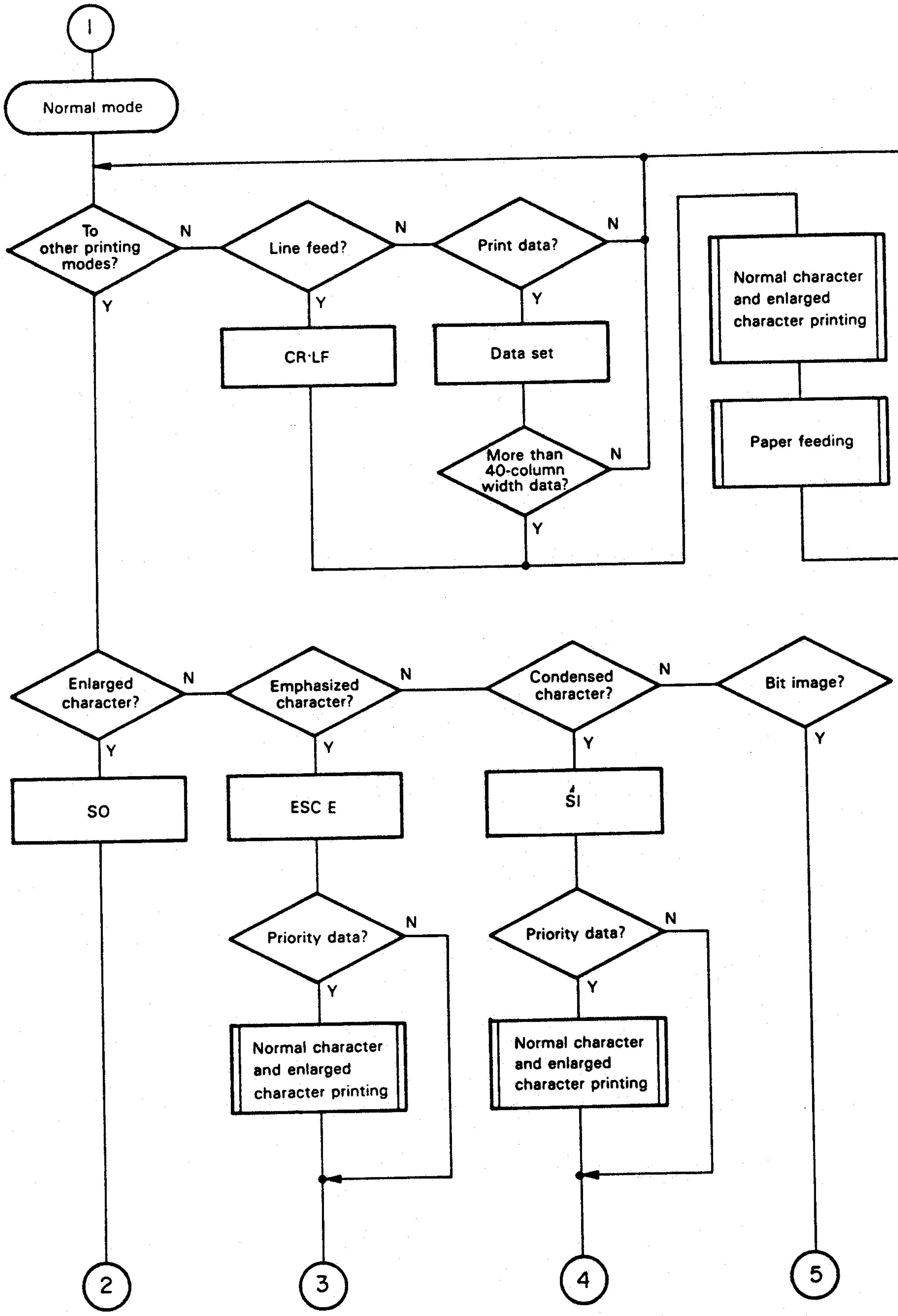

Fig. 2-7 Firmware Flowchart: Part 2

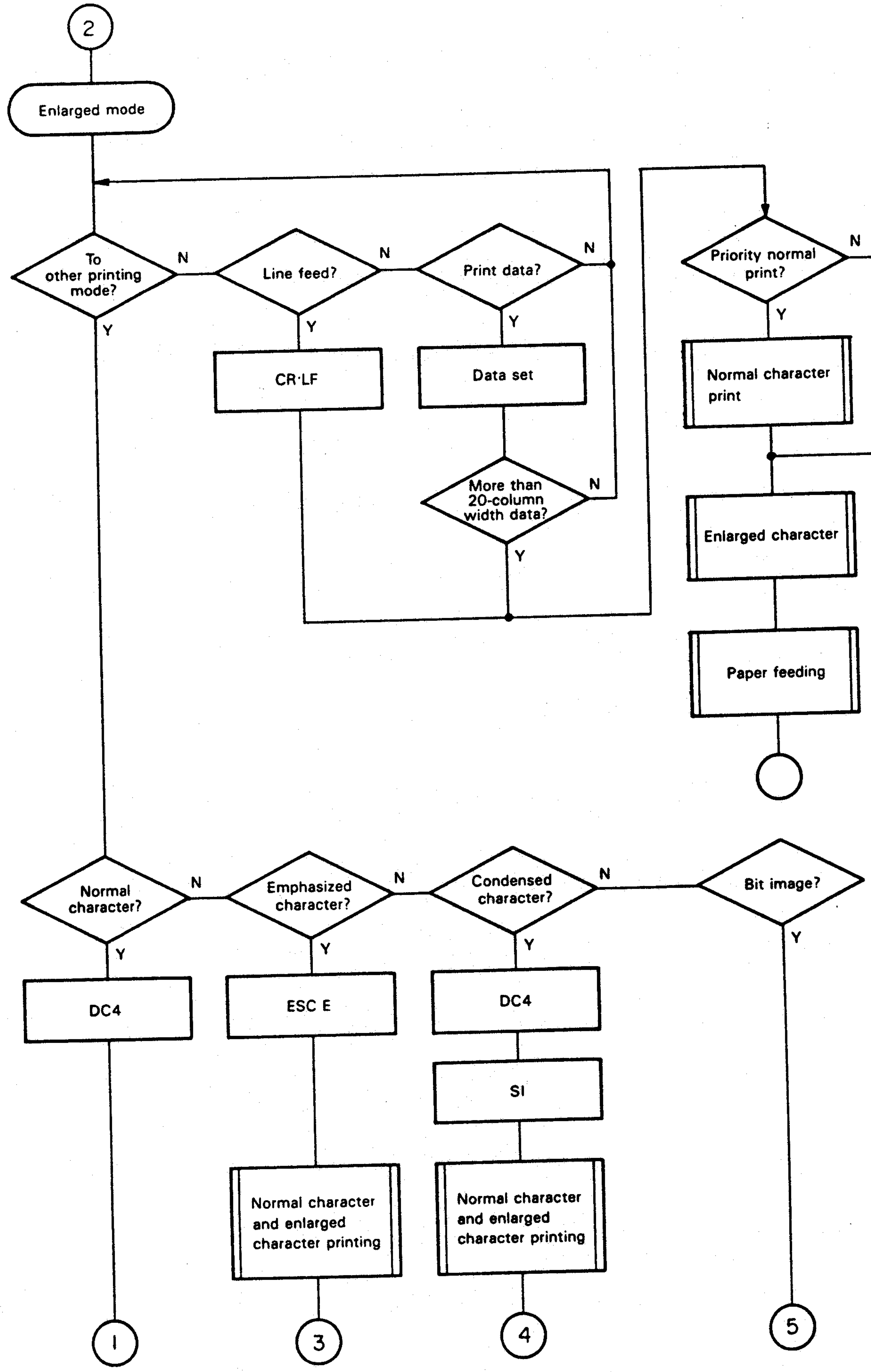

Fig. 2-8 Firmware Flowchart: Part 3

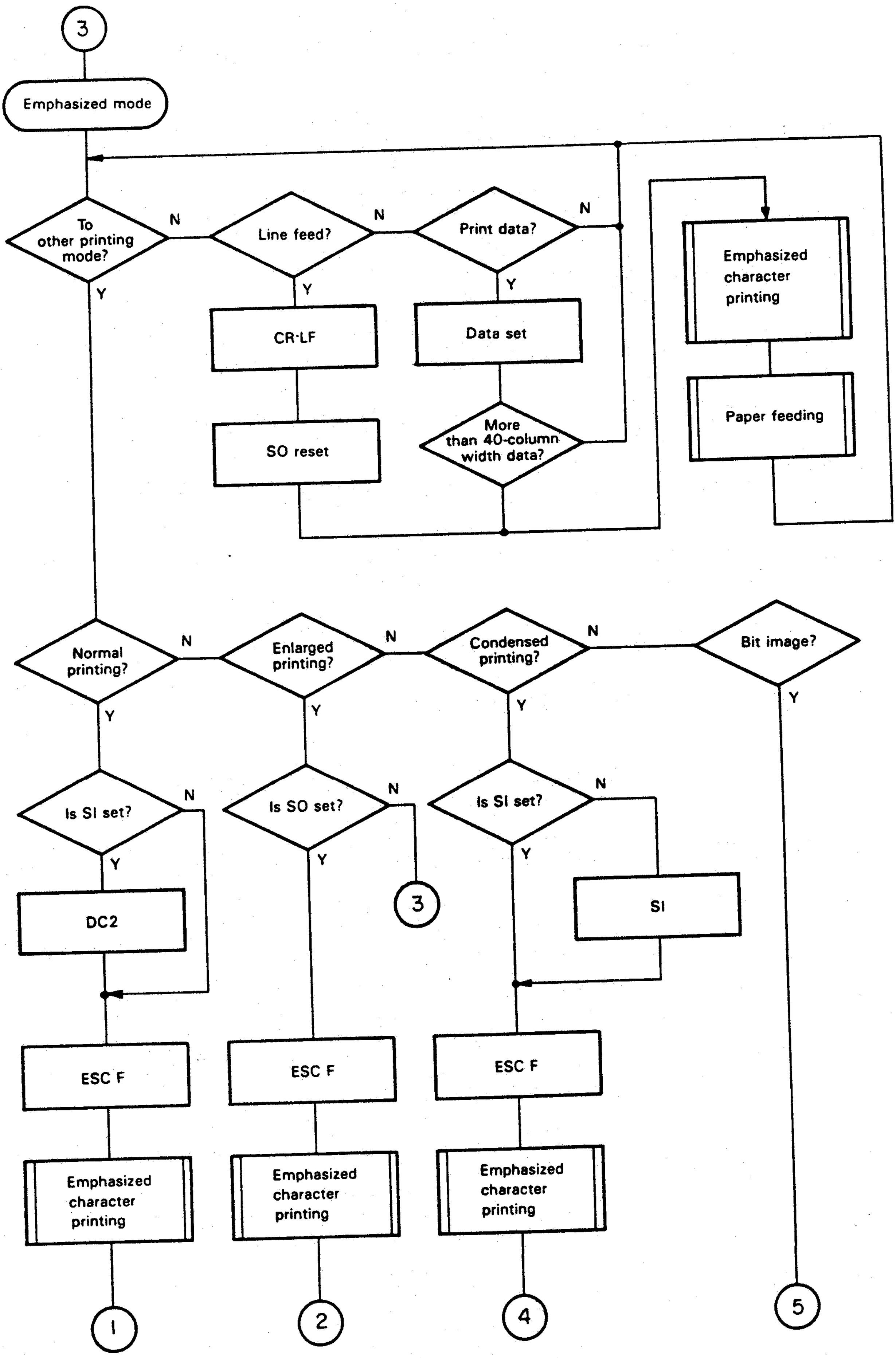

Fig. 2-9 Firmware Flowchart: Part 4

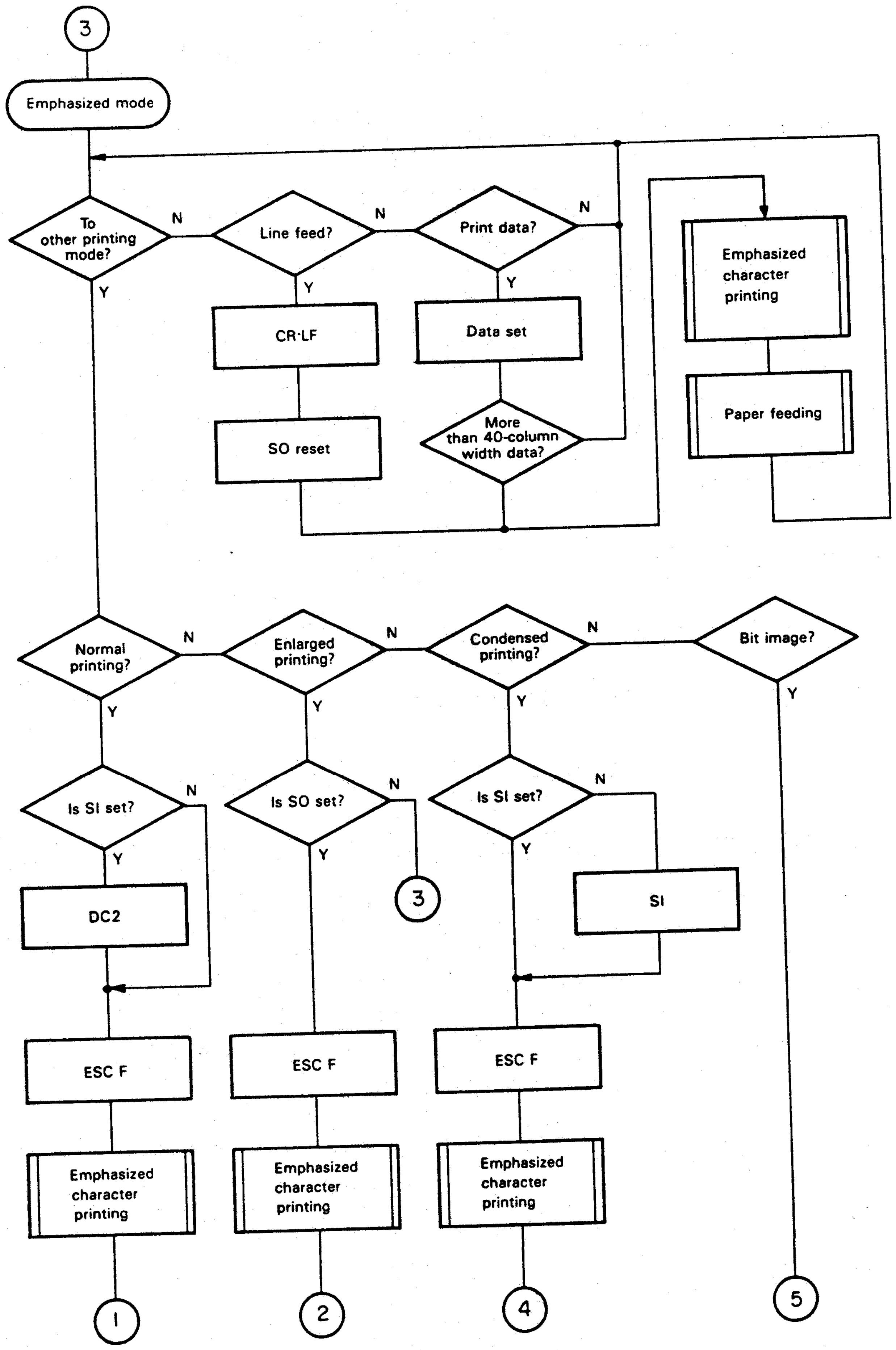

Fig. 2-9 Firmware Flowchart: Part 4

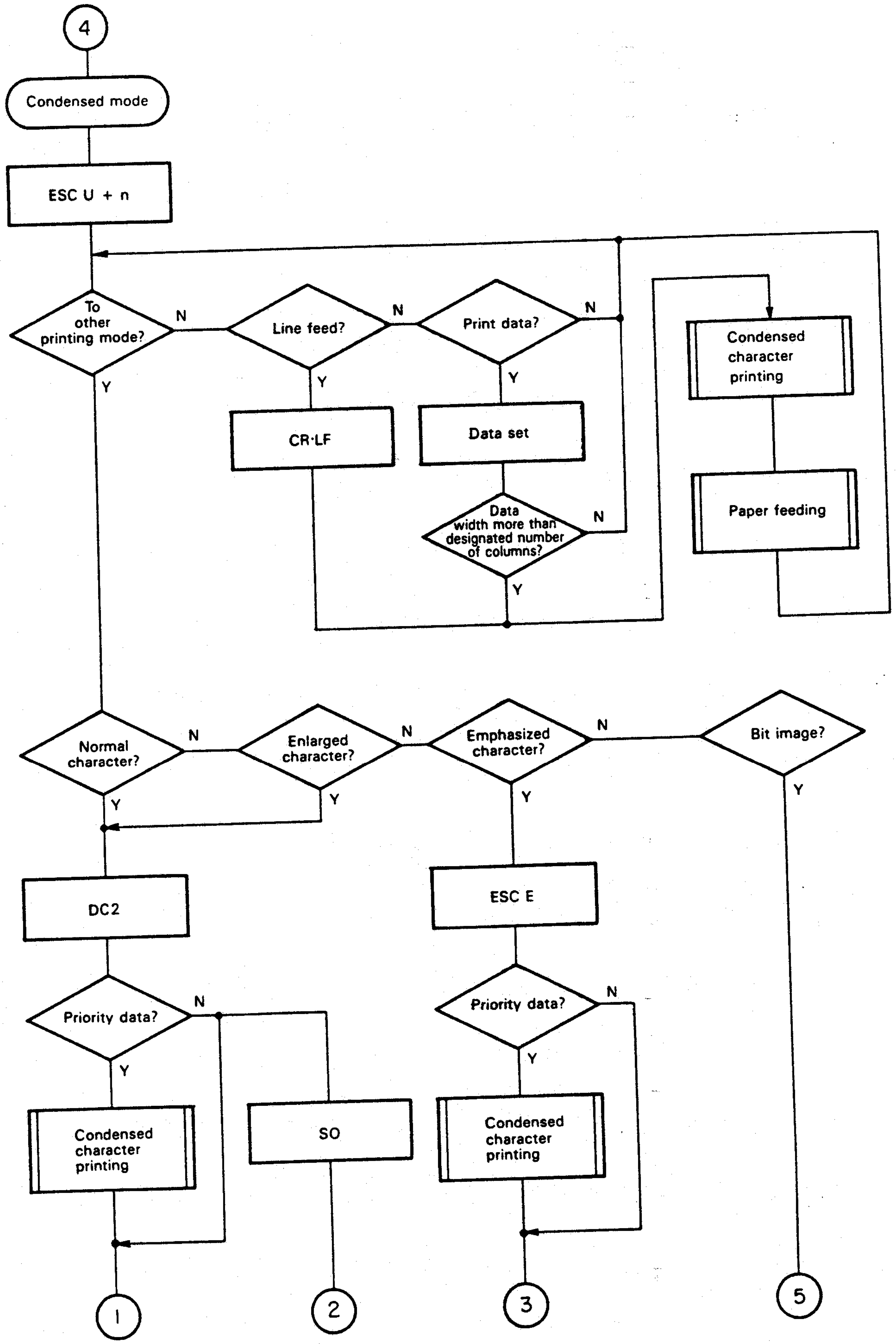

Fig. 2-10 Firmware Flowchart: Part 5

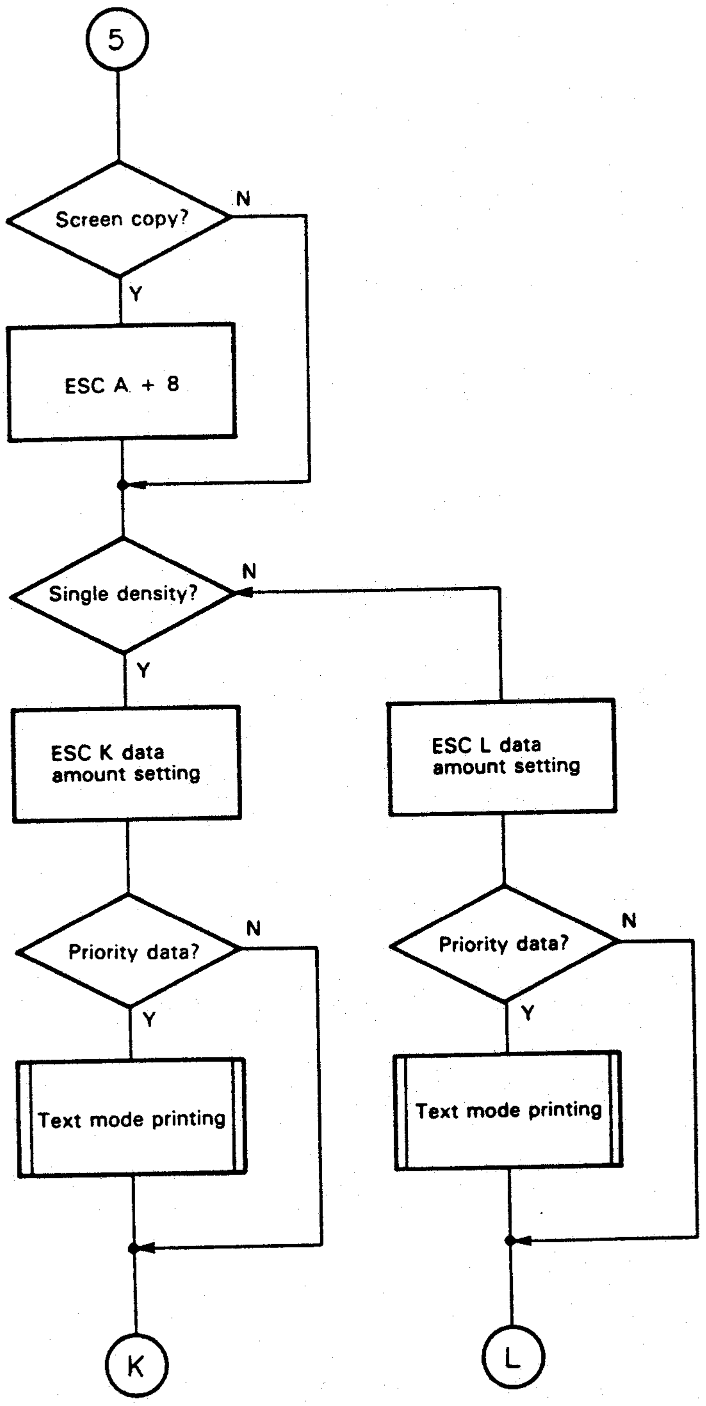

Fig. 2-11 Firmware Flowchart: Part 6

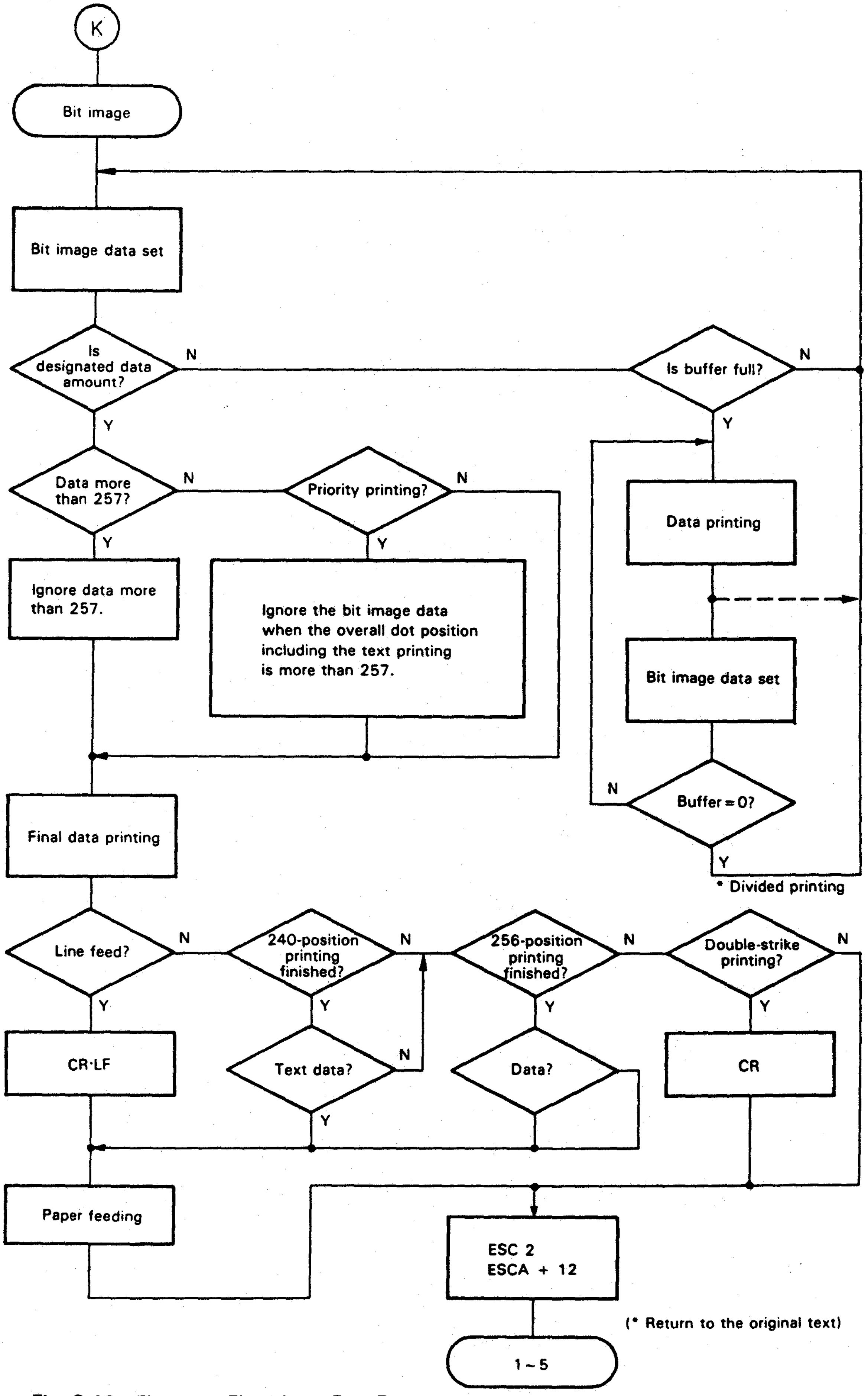

Fig. 2-12 Firmware Flowchart: Part 7

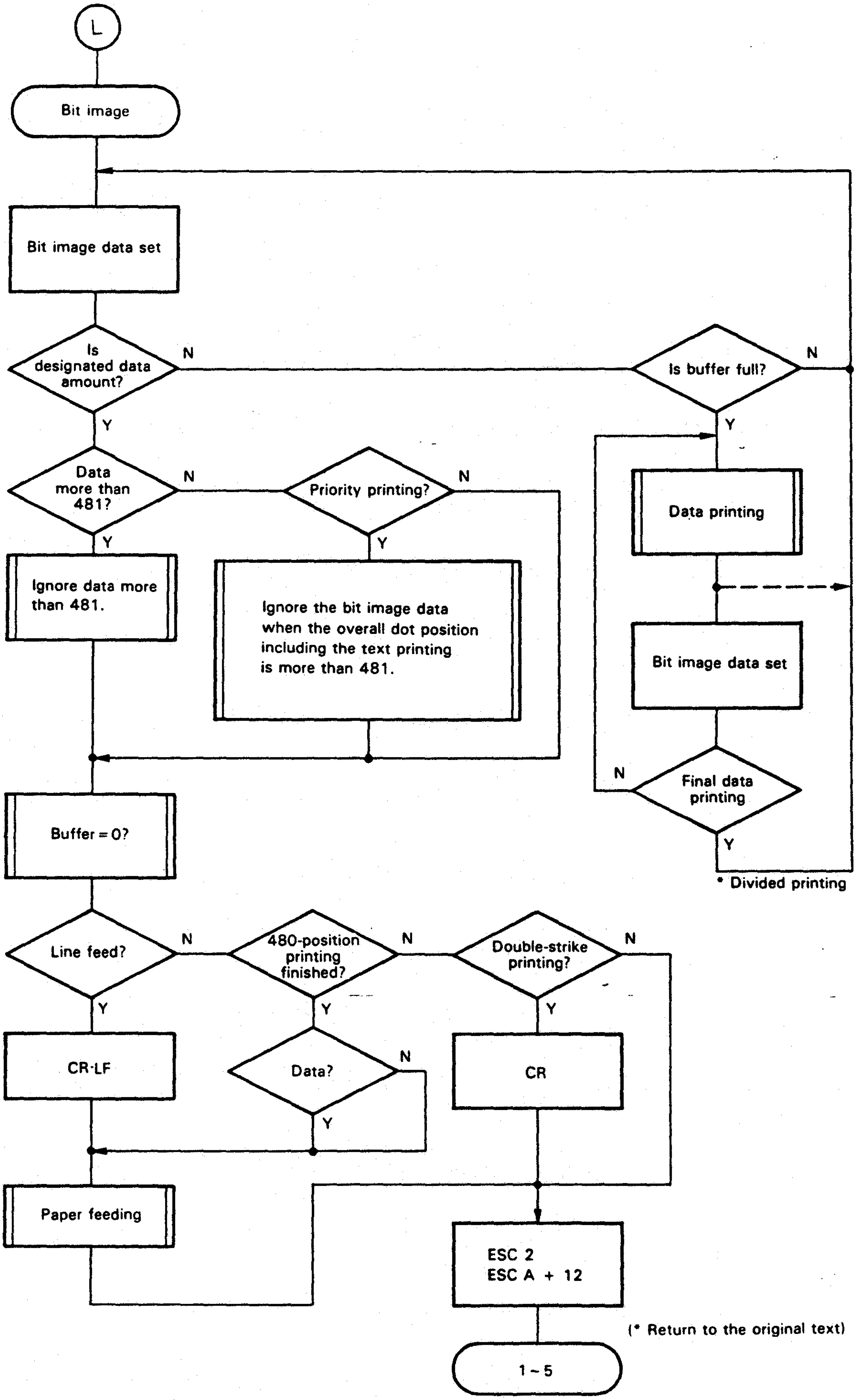

Fig. 2-13 Firmware Flowchart: Part 8

CHAPTER 3
PRINCIPLES OF OPERATION

3.1 Principles Of Thermal Printing 3-1
3.2 Thermal Printhead Operation 3-2
3.3 M-1210 Printer Mechanism Operation 3-3
3.3.1 Facility Outline 3-3
3.3.2 Operating Principles 3-4
3.4 Electrical Circuit Operation 3-9
3.4.1 AC Adaptor 3-11
3.4.2 Battery Unit (Used Also for the CX-20) 3-12
3.4.3 Recharging Circuit 3-13
3.4.4 Power Circuit 3-15
3.4.5 Battery Voltage Detection Circuit 3-17
3.4.6 Oscillation Circuit 3-18
3.4.7 Reset Circuit 3-18
3.4.8 CPU Ports 3-21
3.4.9 Interface Circuit 3-26
3.4.10 Motor Drive Circuit 3-33
3.4.11 Timing Signal Generating Circuit 3-35
3.4.12 Head Driving Circuit 3-37
3.4.13 Switch PCB 3-41

LIST OF FIGURES

3-1 Thermal Printing 3-1
3-2 Thermal Printhead 3-2
3-3 Printer External View 3-3
3-4 Timing Signal 3-4
3-5 Reset Detector 3-4
3-6 Head Shifting 3-5
3-7 Head Pyrogen Elements 3-6
3-8 Pyrogen Element Energizing Pulses 3-6
3-9 Carriage 3-7
3-10 Paper Feeding Gear and Clutch Operation 3-8
3-11 Model-1210 paper-Feeding Cam Groove and Paper Feeding Pitch 3-8

3-12 P-40S Circuit Operation 3-9
3-13 AC Adaptor Internal Circuit 3-11
3-14 Recharging Circuit (1) 3-13
3-15 Recharging Circuit (2) 3-14
3-16 Power Circuit 3-15
3-17 Collector Current 3-16
3-18 Battery Voltage Detection Circuit 3-17
3-19 Oscillation Circuit 3-18
3-20 Reset Circuit 3-19
3-21 Timing Chart 3-19
3-22 CPU Mode Changes 3-20
3-23 CPU Configuration 3-22
3-24 Interface Circuit 3-26
3-25 Handshaking 3-28
3-26 Relationship between DTR and RXD 3-29
3-27 Start-stop Bits 3-30
3-28 Driver Circuit 3-31
3-29 Receiver Circuit 3-32
3-30 Motor Drive Circuit 3-33
3-31 Wave Form of Condensed Character 3-34
3-32 Timing Signal Generating Circuit 3-35
3-33 Standard Character Printing 3-36
3-34 Condensed Character Printing 3-36
3-35 Head Driving Circuit (1) 3-37
3-36 Head Driving Circuit (2) 3-37
3-37 Wave Form of Normal Printing 3-38
3-38 Print and Print Dimensions 3-39
3-39 Wave Form of Condensed Character 3-40
3-40 Switch PCB Circuit 3-41

3.1 Principles Of Thermal Printing

Thermal printers use a heat producing printhead and temperature sensitive paper to create a chemical change on the surface of specially treated paper, resulting in permanently blackened type on the page. The P-40 uses a printhead with nine very small heat elements arranged in a vertical column (Figure 3-1). Current is applied to selected points on the head, corresponding to the matrix pattern of the character to be printed. The head is moved left to right across the paper by the M-1210 printer mechanism. The printer paper darkens at temperatures over 70°C and with prolonged exposure to ultraviolet light and turns completely black at 80—100°C; it is therefore necessary to handle it carefully to avoid discoloration both before and after printing. Also, alcohol, ether, ketones, tape, chroloethylene film and rubber erasers will cause the paper to discolor. It is recommended that only pastes made of starch or gum arabic and films of polyester, polyethylene, or polyproplylene be used with thermal paper.

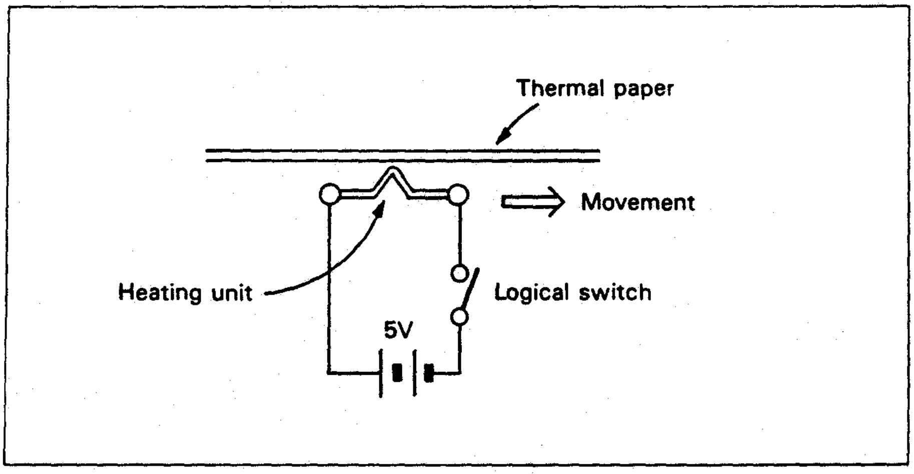

Fig. 3-1 Thermal Printing

3.2 Thermal Printhead Operation

Figure 3-2 shows the P-40 printhead, connected to the FPC cable. The face of the head includes nine small resistors, spaced 0.35 mm apart. The resistance value of each "dot" on each printhead is approximately 10 ohms, but varies between 11.4 and 9.05 ohms. The heads can be divided into two groups: those with resistances of 11.4 to 9.85 ohms and those with resistances of 10.5 to 9.05 ohms. The greater the resistance the longer current must be applied to achieve the correct darkness in the print. To compensate for differences in resistance, the printhead design includes a short circuit between terminals 1 and 2.

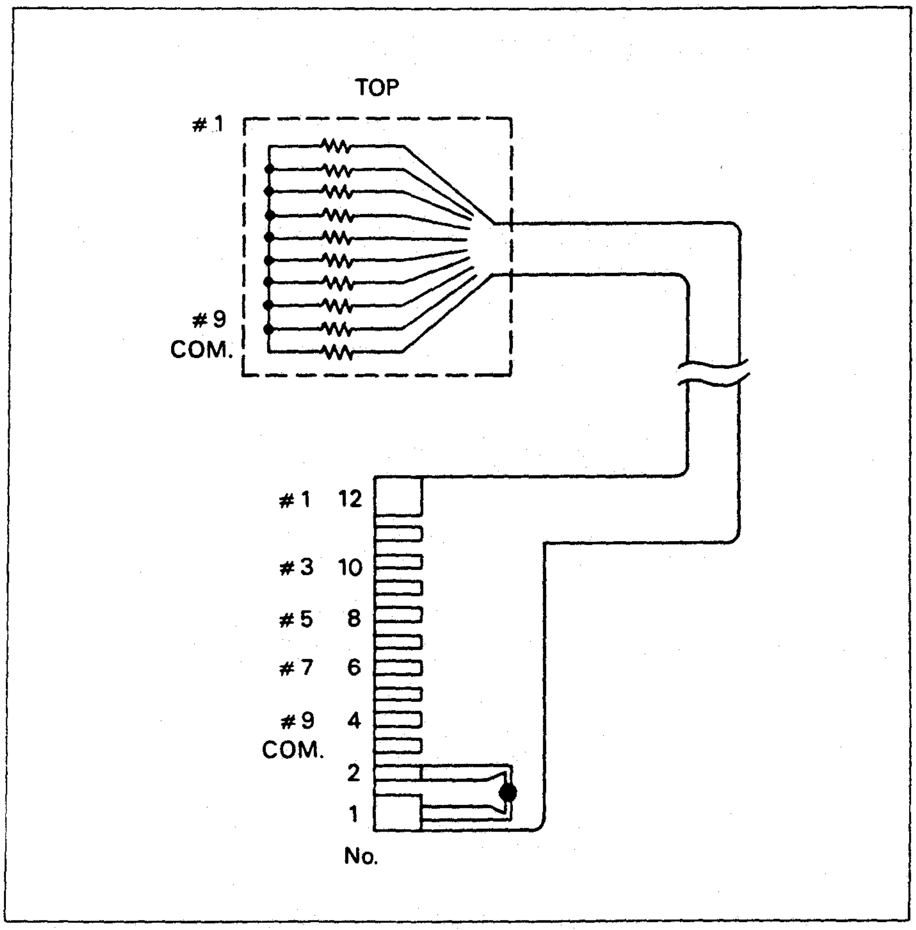

Fig. 3-2 Thermal Printhead

The heating unit is protected by a layer of film which prevents oxidation. Over time, this film becomes worn and cracked due to the repeated rapid heating of the head, and the heating unit beocmes oxidized, causing increased resistance and faint or inconsistent print. The head should be replaced when this occurs or when the resistance is over 13.5 ohms.

Also, paper dust, created by the constant abrasion of the head across the paper, can accumulate in the mechanism and attach to the head, causing the head to exibit signs similar to age or overheating. The head should be replaced when this occurs.

3.3 M-1210 Printer Mechanism Operation

3.3.1 Facility Outline

An external view of this printer is shown in Fig. 3-3.

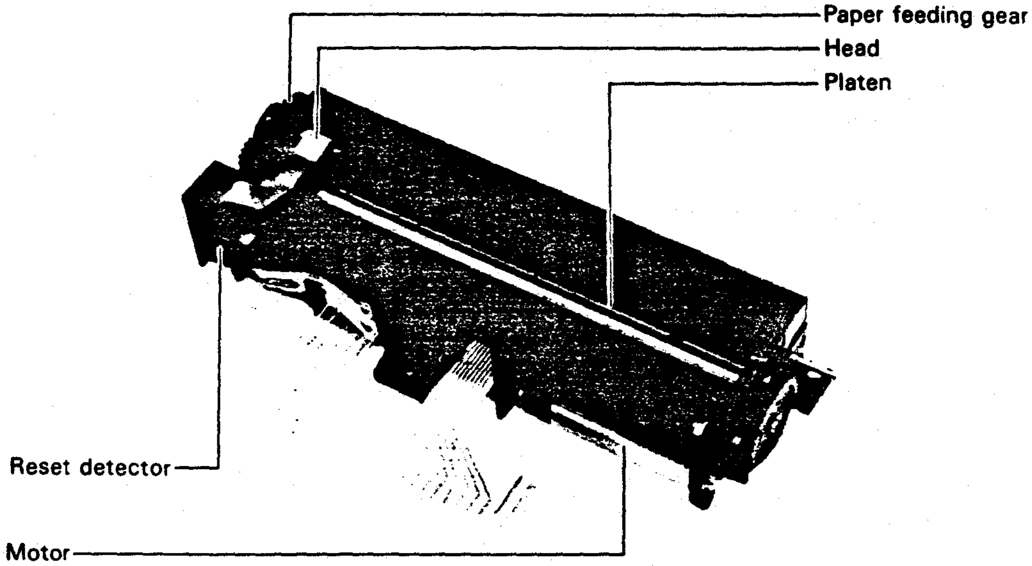

Fig. 3-3 Printer External View

This is a serial thermal printer which prints by shifting the thermal head with a longitudinal 9 dot configuration from left to right.
The motor, which powers this printer, rotates forward and in reverse during one print cycle.
During forward motor rotation, the head moves to the right to the area.
During reverse motor rotation, the head is returned, and the recording paper is advanced. During the Model-1210 Graphic print mode, the mode where no paper feeding is performed is possible.
The timing detector and the reset detector generate the print timing signal, and the timing signal which stops motor reversal.
These operations are roughly classified into detector, printer, and carriage operations.

3.3.2 Operating Principles

3.3.2.1 Detectors

The timing detector generates the signal which corresponds to the head (pyrogen element) position in the printing area.

The reset detector generates the standard print area start signal, and the standard signal to stop motor reversal.

(1) Timing detector

This is a tacho generator directly connected to the motor which generates the Tn sine wave with a frequency that is proportinoal to the motor rotation speed. The waveform of this signal is shaped by a circuit to provide the timing signal.

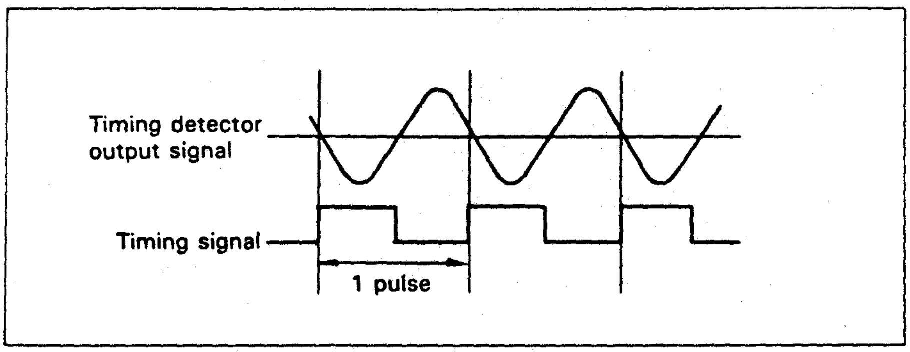

Fig. 3-4 Timing Signal

(2) Reset detector

This is a mechanical switch which operates once every printing cycle, and which is off when and is on when the carriage is shifted and enters the printing area.

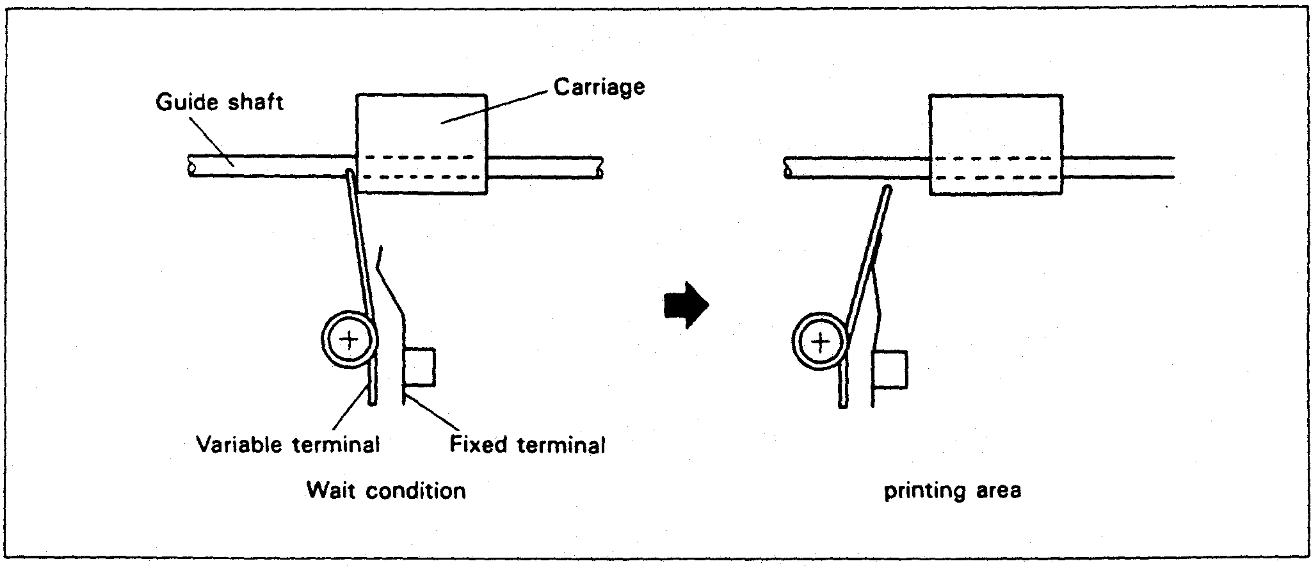

Fig. 3-5 Reset Detector

3.3.2.2 Printing Mechanism

The printing mechanism mainly consists of the carriage (head), head feeding cam, and the motor.

(1) Carriage (head) shift principle

Fig. 3-6 shows the carriage head shifting.

The head feeding cam gear rotates through reduction gear operation provided by forward motor rotation.

Since the carriage (head) is engaged with a spiral groove on the head feeding cam, the carriage (head) which moves on the guide shaft is shifted toward right one by one. Carriage head return is performed by reversing the motor. Also, the head is pressed against the platen by forward motor operation, and is released from the platen by motor reversal because the head lever on which the head is fixed is controlled by the head release lever on the bottom of the frame.

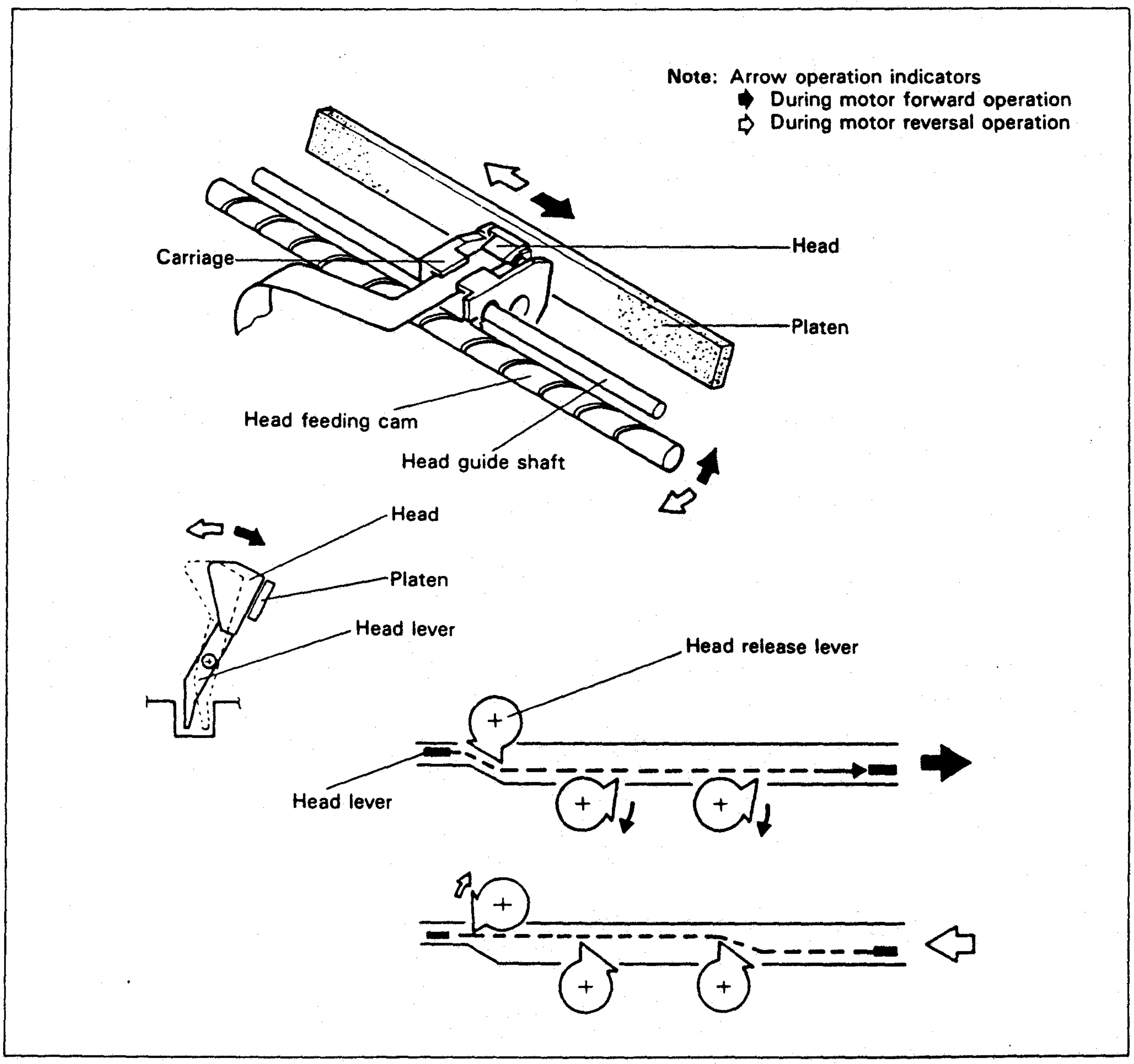

Fig. 3-6 Head Shifting

(2) Principle of head (pyrogen element) engergization (printing)

Fig. 3-7 shows the head pyrogen elements while Fig. 3-8 shows the pyrogen element energizing pulses.

Of the head pyrogen elements, #1, #3, #4, #5, and #9 lead by a half dot (divided into two parts). When the head is shifted to the right, the pyrogen elements are energized (print) in conformance with prescribed timing signals.

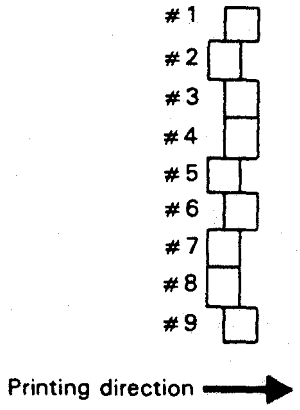

Printing direction

a) Uses #1 ~ #7 elements during the alphanumeric mode. When the English small letters are printed, #8 and #9 elements are additionally used.

b) During the graphic mode, #1 ~ #8 elements are used.

Fig. 3-7 Head Pyrogen Elements

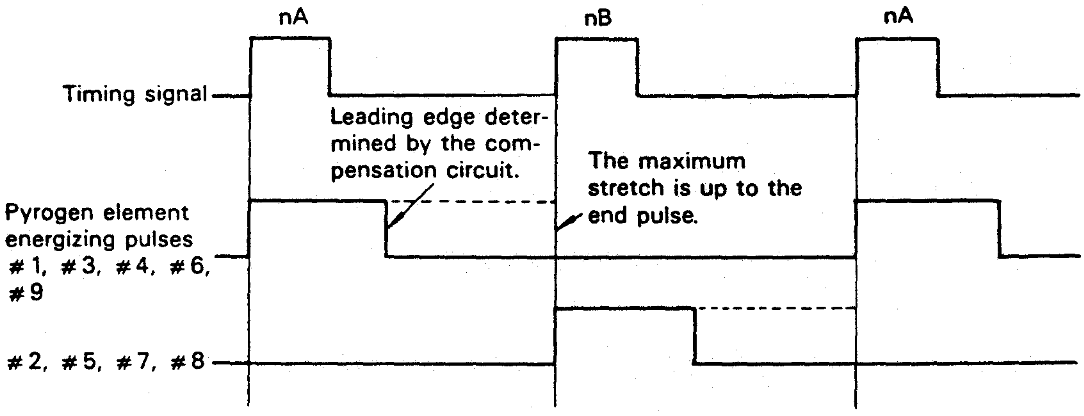

NOTE: During the period from nA to nB timing signal generation, the head (pyrogen element) shifts by a half dot. Therefore, if pyrogen elements #1, #3, #4, #6, and #9 are energized at nA, and pyrogen elements #2, #5, #7, and #8 are energized at nB, the printing is on one longitudinal line "I".

Fig. 3-8 Pyrogen Element Energizing Pulses

3.3.2.3 Carriage

Fig. 3-9 shows the carriage.

The recording paper is always pressed against the paper feeding roller by a certain pressure. Since the paper feeding cam groove engages the carriage, the cam rotates back and forth by a certain value depending on the carriage left and right movement.

The paper feeding driving gear operates by being incorporated with the paper feeding cam, and simultaneously rotates the engaged paper feeding gear back and forth.

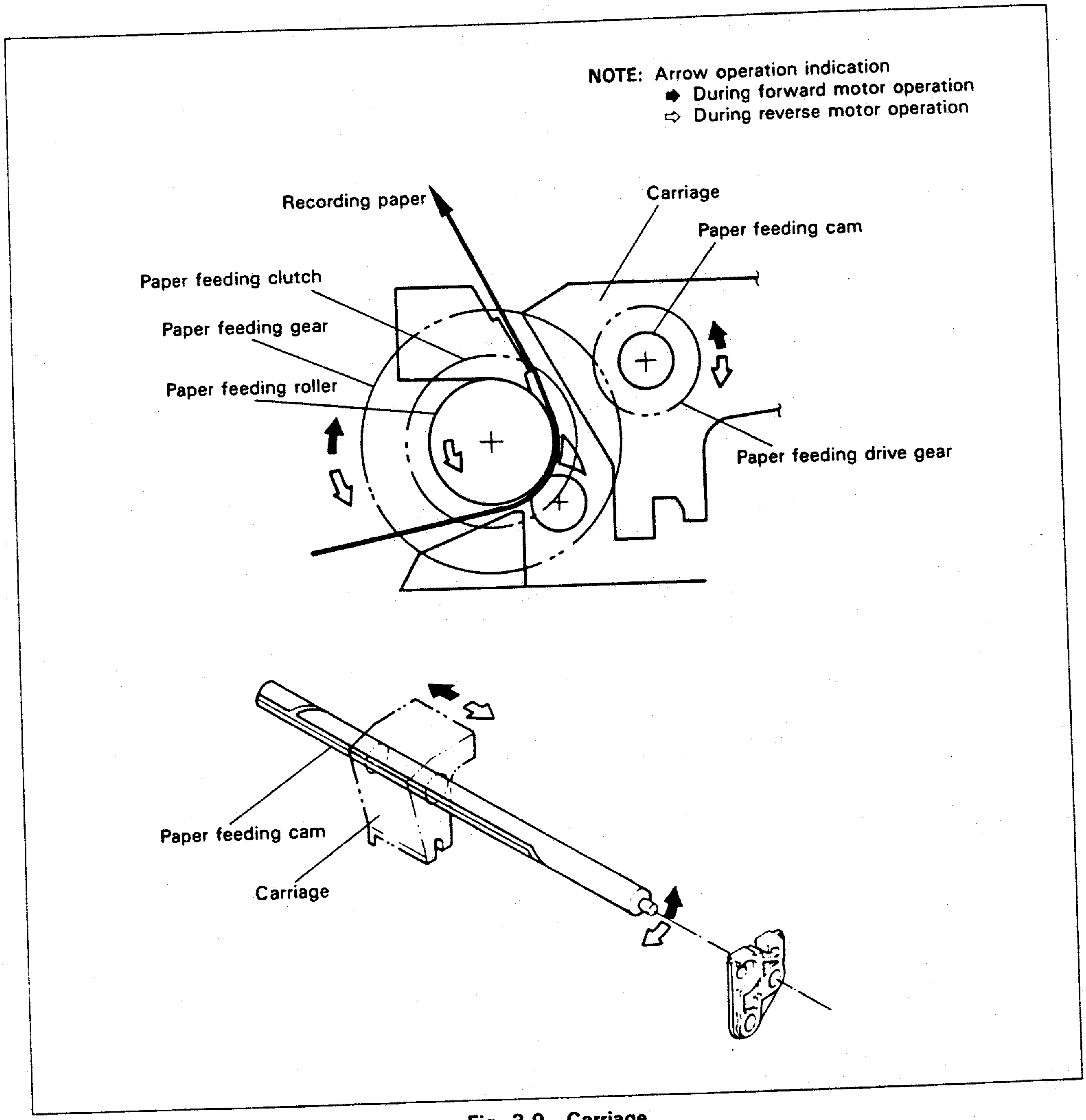

Fig. 3-9 Carriage

(1) Paper feeding operation
The tooth-shaped paper feeding gear shown in Fig. 3-10 is engaged with the paper feeding clutch, is linked with the paper feeding roller. Since the paper feeding clutch is only engaged in one direction against the paper feeding gear back and forth rotation, the paper feeding roller only rotates in one direction to feed the recording paper.

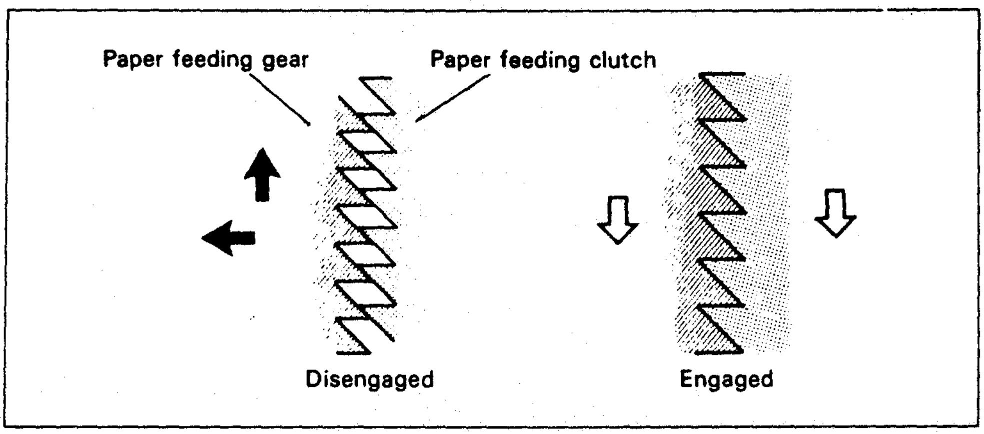

Fig. 3-10 Paper Feeding Gear and Clutch Operation

(2) Paper feeding pitch selection
The paper feeding cam has two different cam grooves for 12 dot (4.2 mm) paper feed as shown in Fig. 3-11 and 3-12. They are selected by controlling the return timing of the carriage (head) which determines the paper feeding pitch. Paper feed is performed during carriage (head) return. Since the Model-1210 paper feeding cam also has a cam groove for 0 dot paper feeding (no paper feed) which automatically passes through this cam groove after the graphic print mode is selected, paper feed is not performed. Therefore, repeat printing on one line, or mixed printing of alphanumeric and graphic modes can be performed with the Model-1210 with one print cycle terminated by performing 8 dot or 12 dot paper feed once after the termination of printing.

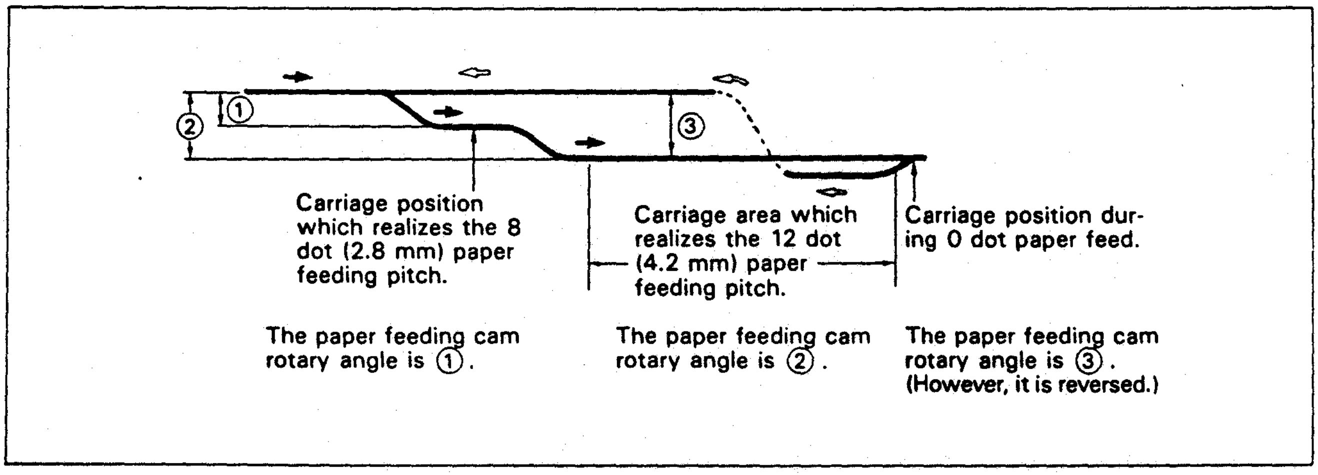

Fig. 3-11 Model-1210 Paper Feeding Cam Groove and Paper Feeding Pitch

3.4 Electrical Circuit Operation

P-40 circuit operation is outlined in Fig. 3-12.

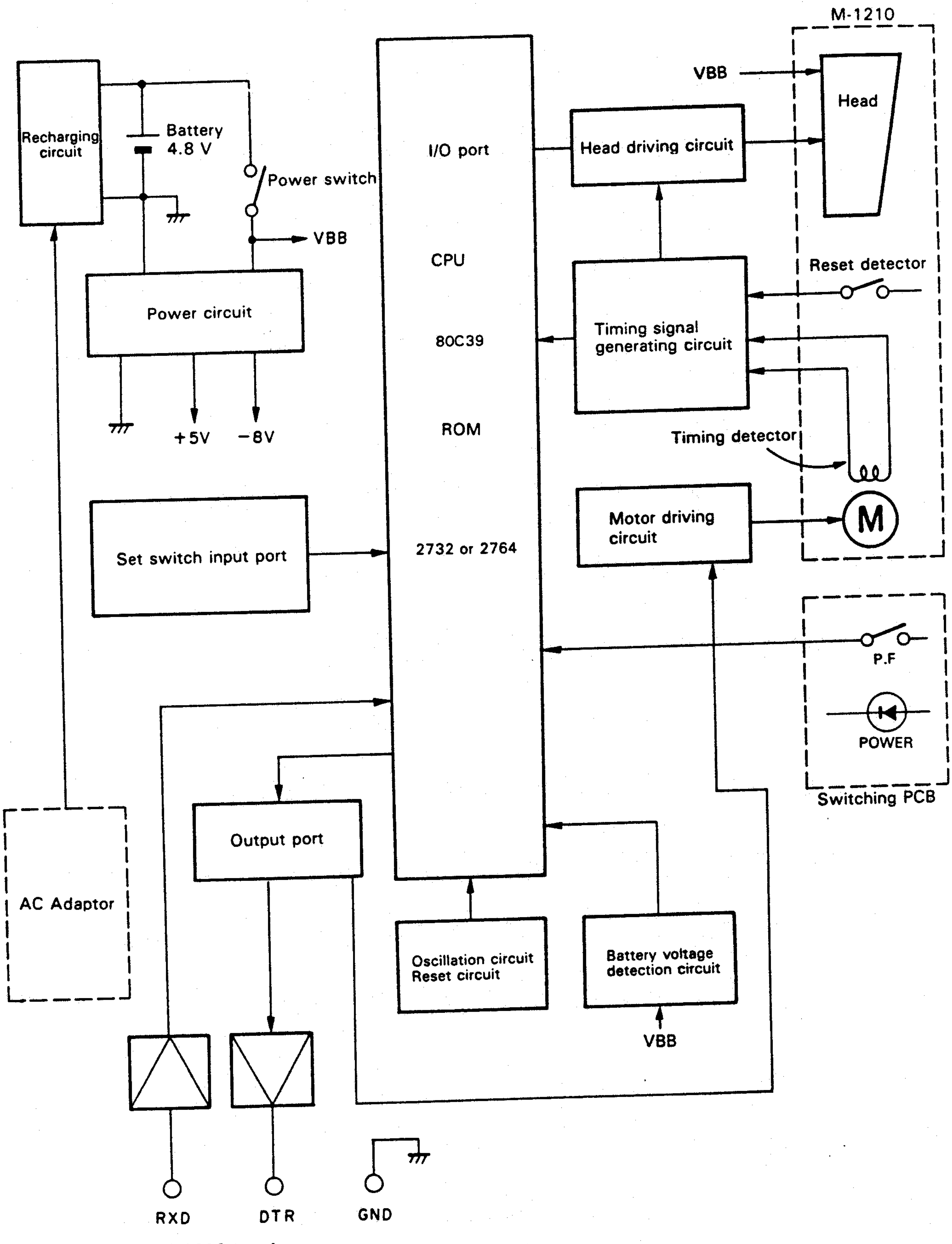

Fig. 3-12 P-40S Circuit Operation

The P-40S is usually used with an AC adaptor. When the adaptor is connected, the internal NiCd batteries are charged via the recharging circuit, whether the power switch is on or off. When the power switch is on, the LED on the printer lights up and the AC adaptor supplies power to both the recharging circuit and the operation circuits of the printer.

The power circuit consists of a DC-DC convertor which supplies stabilized +5V to the logic circuits and −8V to the serial interface. Power for the thermal head and motor (VBB) is supplied directly from the battery, with a wide margin of fluctuation.

When the printer is driven by batteries with the AC adaptor disconnected, the battery voltage drops as power is discharged, and the battery voltage detection circuit will stop operation of the printer if the voltage goes below 3.2 V. Once stopped, the printer cannot be reactivated until the AC adaptor is connected and the pwoer switch is turned on again.

When power is supplied to the logic circuits, a clock pulse is generated by the oscillation circuit. The CMOS-CPU/ROM is activated when the reset signal is cleared, and oscillates at 6 MHz; the printer enters standby mode and begins alternately checking the status of the paper feed switch and the data input port. The DTR READY signal is output from the printer while the unit is not printing. When a character or control code is ready at the host, DTR READY causes the codes to be converted to serial data, which are sent to the printer as RXD via the RS-232C interface. From the interface, the data are converted to codes which can be read by the CPU and stored in the CPU input buffer until the buffer is full or a print command is received, at which time the printing sequence is activated:

First, the motor is energized by the motor driving circuit, shifting the carriage to the right. An abnormal battery voltage or defective motor revolution will cause the CPU to stop operating at this time. When the motor starts turning, the timing detector connected to the motor shaft generates an AC voltage, which is supplied to the timing signal generating circuit. After shaping the waveform, this circuit supplies the CPU with the conduction timing signal to the head, and supplies the head driving circuit with the head conduction pulse signal.

Upon receipt of the reset signal from the mechanism, the CPU supplies the head driving signal and character data in synchronization with the timing signal, causing the head driving circuit to energize the head and enabling printing of each dot position.

When printing of a line is completed, the motor turns in the reverse direction, moving the carriage to the left. When the carriage returns to the home position, the CPU receives the reset signal and stops the motor. The paper advances when the carriage is at home position. The printer subsequently enters standby mode. Details of the operation of each circuit are described below.

3.4.1 AC Adaptor

Fig. 3-13 shows the internal circuit of the AC adaptor.

AC adaptors for the P-40 comply with regional safety regulations; the 200 V adaptors are double-insulated and include a thermal fuse for added protection.

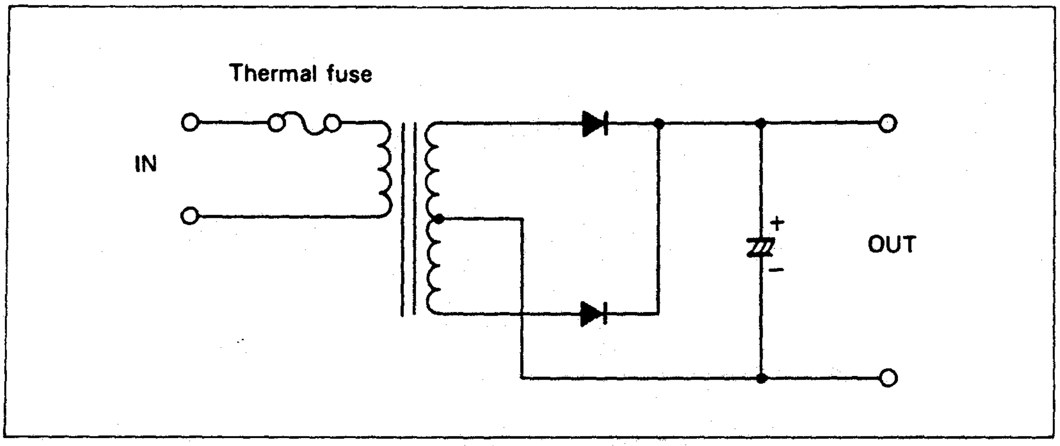

Fig. 3-13 AC Adaptor Internal Circuit

Table 3-1 AC Adaptor Type

Input voltage	Safety regulation	Thermal fuse	Output voltage under no load	Primary winding resistance
AC100V		–	8.8±0.6V	200Ω
120V	UL. CSA	–	8.8±0.6V	200Ω
220V		O	8.8±0.6V	900Ω
240V	BSI	O	8.8±0.6V	1000Ω
240V	ETSA	O	8.8±0.6V	750Ω

3.4.2 Battery Unit (Used Also for the CX-20)

The battery unit contained in the P-40 (EPSON C20RB) is made up of four, quickly rechargeable Ni-Cd batteries connected in series.

Since the batteries utilize chemical change, their service life is shorter than that of other electronic components, and they are greatly affected by temperature and operating conditions. The following points must be observed when using the battery unit:

1. Recharge the battery unit for 7 hours under normal temperatures.
2. Always turn off the power switch after using the printer.

The battery discharge time under normal temperatures is approximately 1 hour for continuous printing and 4 hours at standby. Intermittent use of the battery unit prolongs the discharge time.

When the printer is driven by batteries, the battery voltage will varies from the maximal 5.9 V at full recharge to 3.2 V, at which time the voltage detection circuit is activated. Turning off the power switch causes the battery voltage to rise.

Battery life is reduced by excessive discharge caused by repeatedly neglecting to turn off the power switch. When the batteries are over-discharged, be sure to fully recharge them before attempting to use the printer; 6 to 7 hours of recharging under the rated input voltage is sufficient, though the time may vary slightly, depending on the AC adaptor input voltage. The batteries are considered to be fully charged when the voltage reaches 5.8 V under normal temperatures.

Diminished battery discharge time indicates that the battery life is almost exhausted. Replace the battery pack when the discharge time is 50% of the initial value. (Normal use of the batteries allows more than 500 cycles of recharging and discharging.) The following precautions should be noted:

1. Repeatedly over-discharging the batteries may cause reverse charging.
2. Recharging the batteries at 0°C or below may cause the safety value inside the battery unit to be activated.
3. Recharging the batteries at 45°C or above will deteriorate the battery. Never recharge the batteries while the printer is exposed to bright sun light or heat.

3.4.3 Recharging Circuit

Connecting the AC adaptor to the printer permits the printer to be used while the batteries are being charged. (The AC adaptor cannot be used alone since it cannot supply the printer with enough current for printing.)
When the battery voltage detection circuit is activated after the printer has been used by the battery power, connect the AC adaptor and reset the power switch. This will allow further use of the printer. However, the printer will not immediately function, even after connecting the AC adaptor, if the batteries have been excessively discharged. Recharge the batteries for at least an hour before attempting to use the printer.

The recharging operation is described below. Please refer to Figure 3-14.
The battery unit is connected to CN3 and the AC adaptor to CN2. The power switch (SW2) consists of a slide switch between 2 circuits, turning ON/OFF the battery output.
To quickly recharge the battery, turn off the power switch. All current from the AC adaptor will be used for charging the batteries.
Fluctuations of the AC adaptor input voltage will cause variations in the recharging current. Therefore, resistor R1 is installed for limiting the recharging current within the rated values for charging.
Turning on the power switch reduces the current for recharging, as part of the current flows into the printer circuits. Therefore, R16 is installed to increase the recharging current, allowing the printer to be used while the batteries are being charged.

The table 3-2 shows the recharging current values.
The table shows that increase of the input voltage in comparison to the rated value will result in increase of the recharging current. This will reduce the recharging time but may induce over-charging.

On the other hand, a lower input voltage will prolong the recharging time as well as battery life.

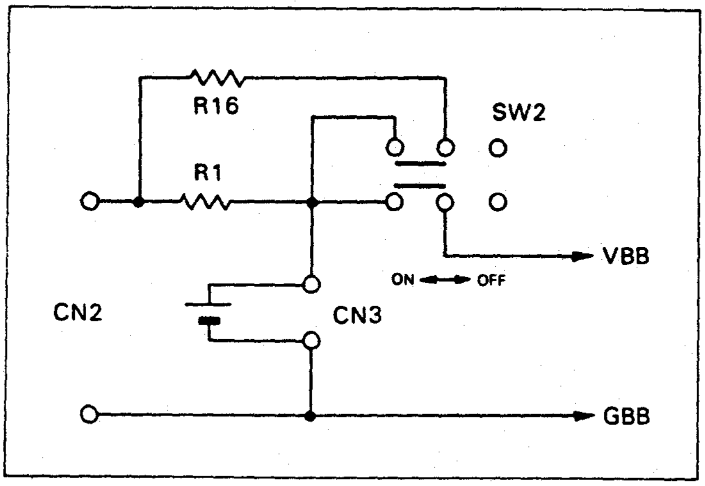

Fig. 3-14 Recharging Circuit (1)

Table 3-2 Recharging Current Values

Input voltage	Recharging current	
	Power OFF	Power ON
90%	60mA	10mA
100	90	50
110	120	100

Fig. 3-15 shows the recharging circuit.
Transistor Q5 allows a maximal recharging current to flow by short-circuiting both ends of recharge resistor R1. In other words, Q5 is turned on when the motor turns, supplying the motor with the current required for printing and paper feeding.
At this time, the batteries absorb fluctuations in the recharging and load currents, reducing power supply voltage variations.
Fuse F1 protects the unit from a short-circuit caused by malfunction at the load side.
Either R45 or R46 is set to the L level when the motor rotates.
Q7 and Q8 are transistors with built-in resistors.
C7 protects the circuits from external noise voltages.

When Q5 cannot be turned on, the battery discharge time will be reduced. The same problem occurs when the power switch malfunctions.
When Q5 cannot be turned off, the battery will be over-charged, causing battery leakage.

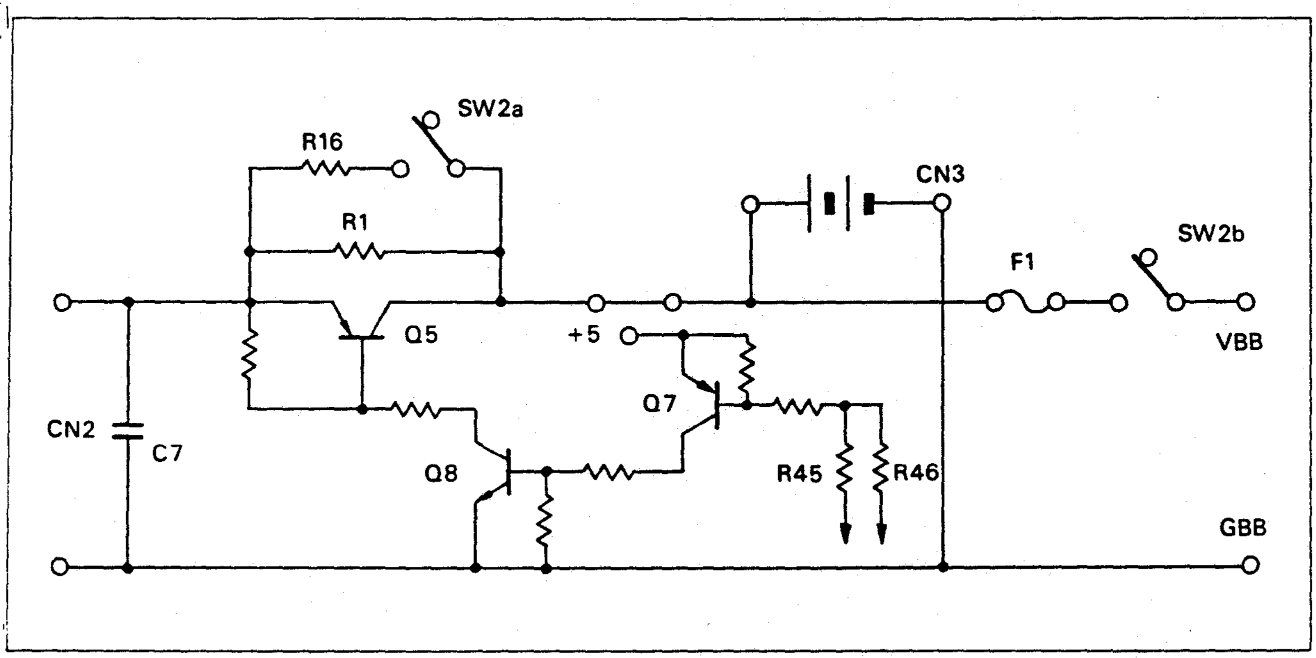

Fig. 3-15 Recharging Circuit (2)

3.4.4 Power Circuit

Operation of the power circuit is described below. Please refer to Fig. 3-16.

When the power switch is turned on, resistor R11 allows base current to flow to Q4 and Q3, causing Q3 to supply current to winding a in T1. And electromotive force is generated at each output of the windings.

Winding c is connected to the base of Q4 such that positive feedback is produced. Q3 is quickly turned on as the generated electromotive force increases the base current on Q3 via C10 and R12. When Q3 is saturated, the collector current increases with time because of the characteristics of winding a. On the other hand, the base current (the base voltage) on Q3 decreases with time because of the differentiating effect of C10 and R12.

While Q3 is turned on, the electric energy is converted to the magnetic energy and is stored in transformer T1.

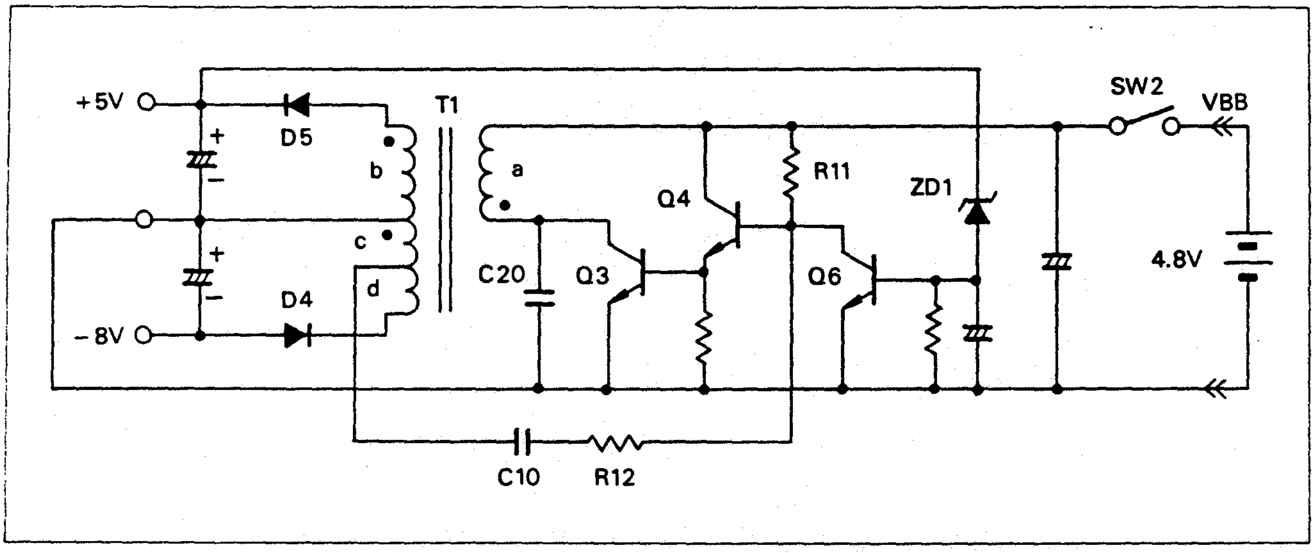

Fig. 3-16 Power Circuit

As the collector current (IC) on Q3 increases and the base current (voltage) decreases, Q3 can no longer maintain saturation, and the collector current stops increasing, causing the transformer to discharge the magnetic energy that has been accumulated. This generates an electromotive force with reverse polarity in each winding.
As the electromotive force generated in winding c sets Q3 and Q4 to reverse bias, the base current is reduced, causing Q3 to be quickly turned off.

When Q3 is turned off, the magnetic energy accumulated in the transformer is discharged to the load side via D4 and D5.
When the magnetic energy discharge is terminated, electromotive force is no longer generated and the reverse biasing of Q3 and Q4 stops; oscillation by R11 then continues.

The output voltage rises as switching of Q3 is repeated. The +5 V output is detected by the zener diode and stabilized by Q6.

Output voltage control is performed by controlling the average current to winding a.
When the conduction period of Q3 is prolonged, the average current value in winding a increases and the output voltage rises; when the period is shortened, the average current value in winding a decreases and the output voltage drops.
In other words, the lower the battery voltage, the lower the oscillation frequency.
(This also applies when the load current increases due to printing.)

Transister Q6 regulates the conduction period of Q3 by dividing part of the base current flowing to Q3 and Q4.

C20 protects Q3 from the spike voltage generated from the transformer when Q3 is turned off.

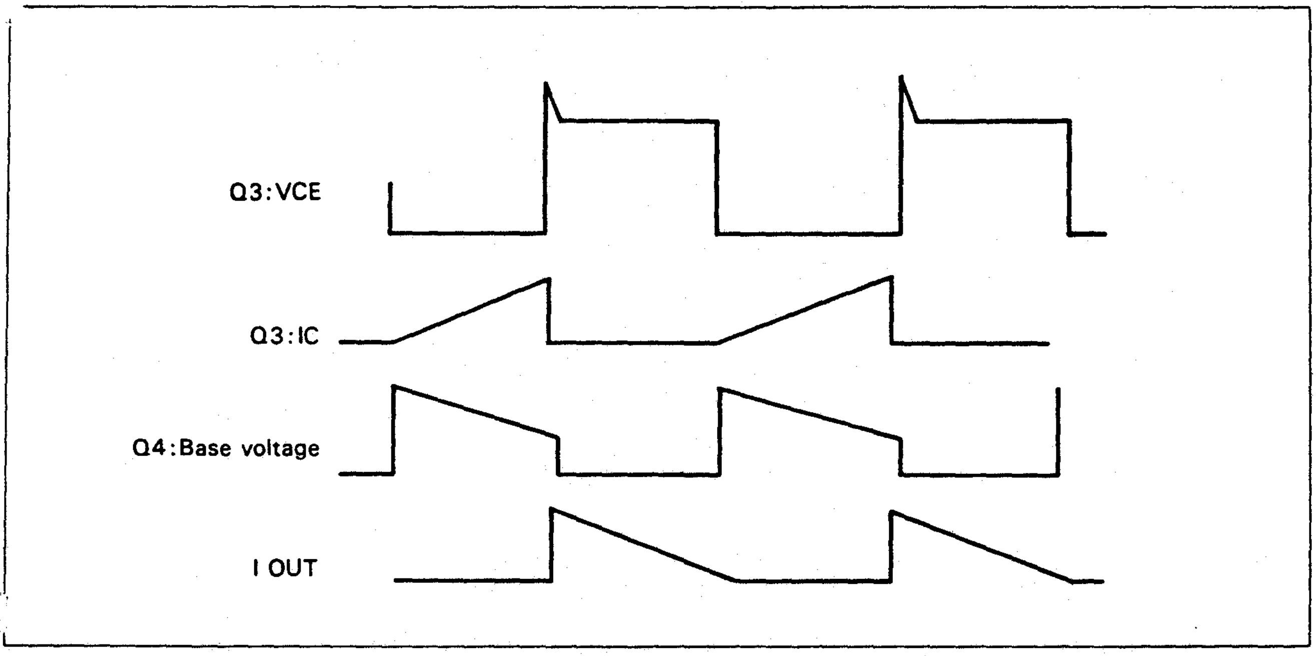

Fig. 3-17 Colletor Current

3.4.5 Battery Voltage Detection Circuit

The battery voltage drops when the printer is driven by the batteries. The printout becomes more faint as the printing time is prolonged.

The battery will be excessively discharged by continuing to operate the printer. Therefore, the CPU stops printer operation when signal T1 is detected by the battery voltage detection circuit, interrupting power consumption.

Be sure to turn off the power switch, or connect the AC adaptor and reset the power switch when the CPU has intercepted printer operation. Otherwise, the batteries will be excessively discharged in approximately 30 minutes.

The battery voltage detection circuit consists of a comparator with a set reference voltage. When the battery voltage VBB becomes 3.2 V or lower, the (−) output of the circuit is set to the High level. The high output is used for clearing and resetting the CPU.

During printing, the circuit is activated when the battery voltage reaches approximately 3.5 V. However, when the CPU is stopped, the circuit output returns to the Low level as the battery voltage rises somewhat.

When the (−) output is set to the High after the battery voltage drops, the carriage will not move at all even if the power switch is turned on, because the CPU has been reset. This occurs when the battery voltage drops or the battery voltage detection circuit malfunctions.

When either the timing signal generating circuit or the motor driving circuit malfunctions, it takes a little while for the CPU to detect the malfunction and stop the printer. Therefore, if the power switch is turned during this time, the carriage will move slightly to the left and stop.

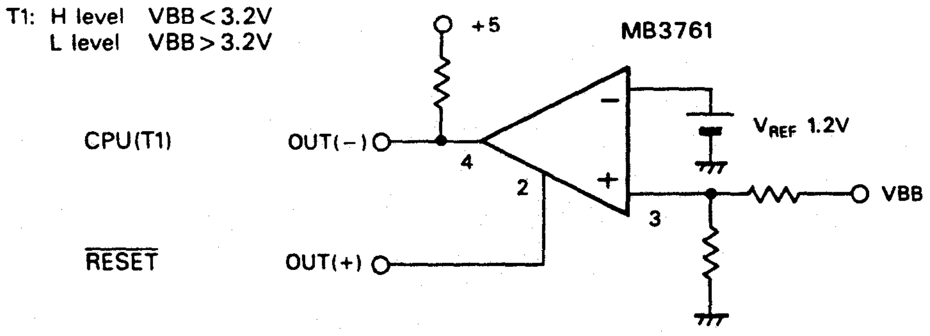

Fig. 3-18 Battery Voltage Detection Circuit

3.4.6 Oscillation Circuit

Fig. 3-19 shows the oscillation circuit.

Turning on the power switch actuates the oscillation circuit to feed the clock signal to the CPU. The oscillation circuit consists of ceramic oscillator CR1 and condenser CM1 connected to the terminals of the CPU.

The output and input voltages of the amplifier incorporated in the CPU are biased to about 2.5 V by resistor Rf.

This circuit uses series resonance from CR1 to oscillate at 6 MHz, and supplies a sine wave output with a stable amplitude and little distortion.

Replace CR1 when the circuit does not oscillate or the output voltage amplitude has become $5V_{p-p}$ or less.

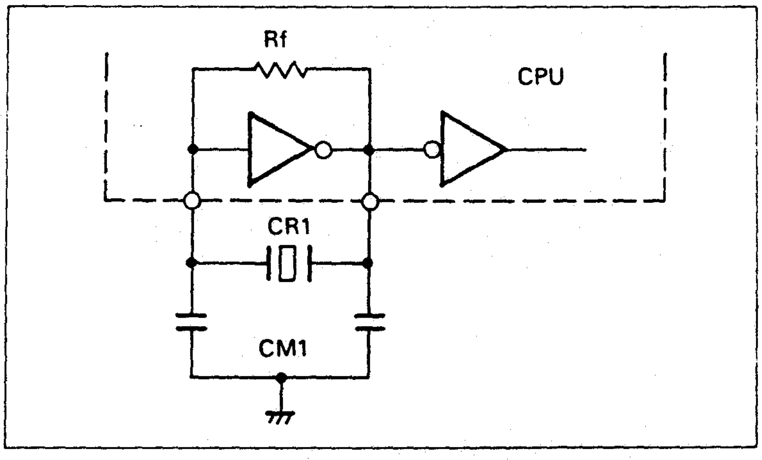

Fig. 3-19 Oscillation Circuit

3.4.7 Reset Circuit

The reset circuit generates reset signals to protect the CPU from operating erroneously when the power switch is turned on and off.

For the P-40, the circuit also functions to protect the printer from malfunction when the battery voltage drops.

The operation of the reset circuit is described below. (Refer to Fig. 3-20.)

Reset signals are generated when the voltage applied to the CPU reset terminal becomes +3.0 V or less; reset has cleared when the voltage becomes higher than this value. Once reset has cleared, another reset signal is not generated until the voltage applied to the reset terminal drops to +1.5 V or less.

Generally speaking, the time lag, which is obtained by recharging the condenser connected to the reset terminal via resistor R1 inside the CPU, is used as the reset signal. However, since R50 is incorporated in this circuit, the voltage on C6 does not rise; the CPU will rermain at reset even after the circuit voltage has been stabilized at +5 V.

CPU reset is terminated by recharging from the battery voltage detection circuit.

The circuit voltage is stabilized when battery voltage VBB becomes +2.5 V or higher. However, the detection level for the battery voltage detection circuit is +3.2 V.

This means that the CPU will remain in reset mode until the circuit voltage is stabilized.

Once the reset is released, resistance at R1 is reduced from 500 KΩ to 50 KΩ. As a result, C6 is recharged without being affected by the battery voltage detection circuit.

At the end of the reset signal, the CPU is activated and reads the contents of the 0 address in the ROM. When the power switch is turned off or the battery voltage drops, the CPU is set to the HLT mode by the T1 signal from the battery voltage detection circuit; the mode is retained until the circuit voltage drops from +5 V to +1.5 V.
When the voltage on C6, which is charged by R1, drops to +1.5 V or less, a reset signal is generated. After this, the CPU operates whether the circuit voltage rises or falls.
When recharging begins during HLT mode, the CPU is not activated even after the circuit voltage has returned to +5 V. Therefore, the power switch has to be turned off and on again. (See Figure 3-20 and 3-21, below.)

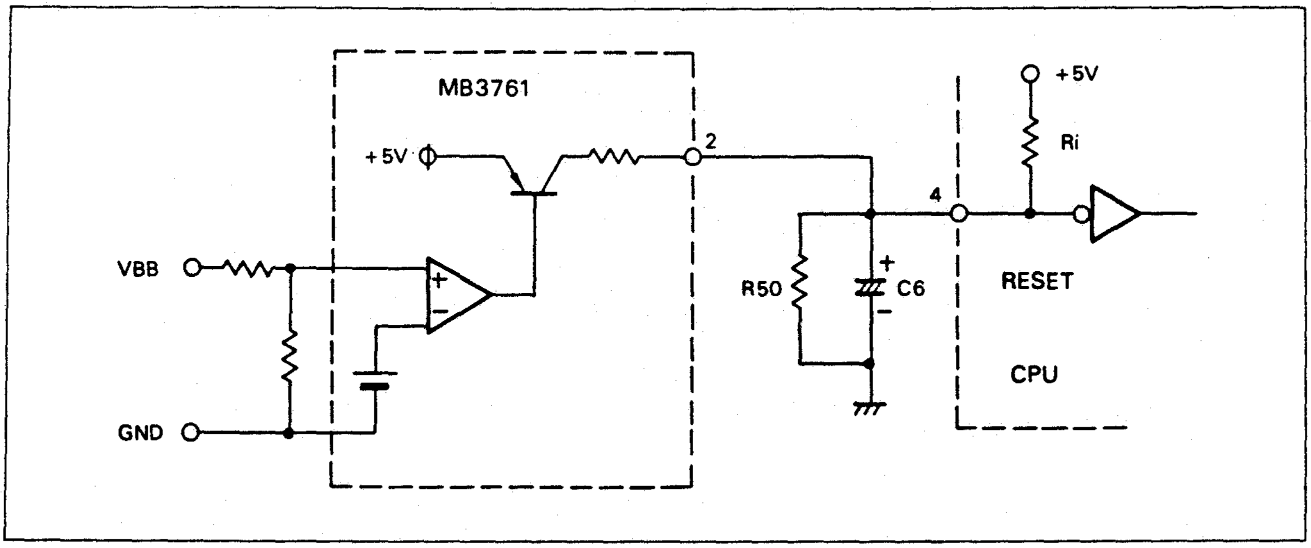

Fig. 3-20 Reset Circuit

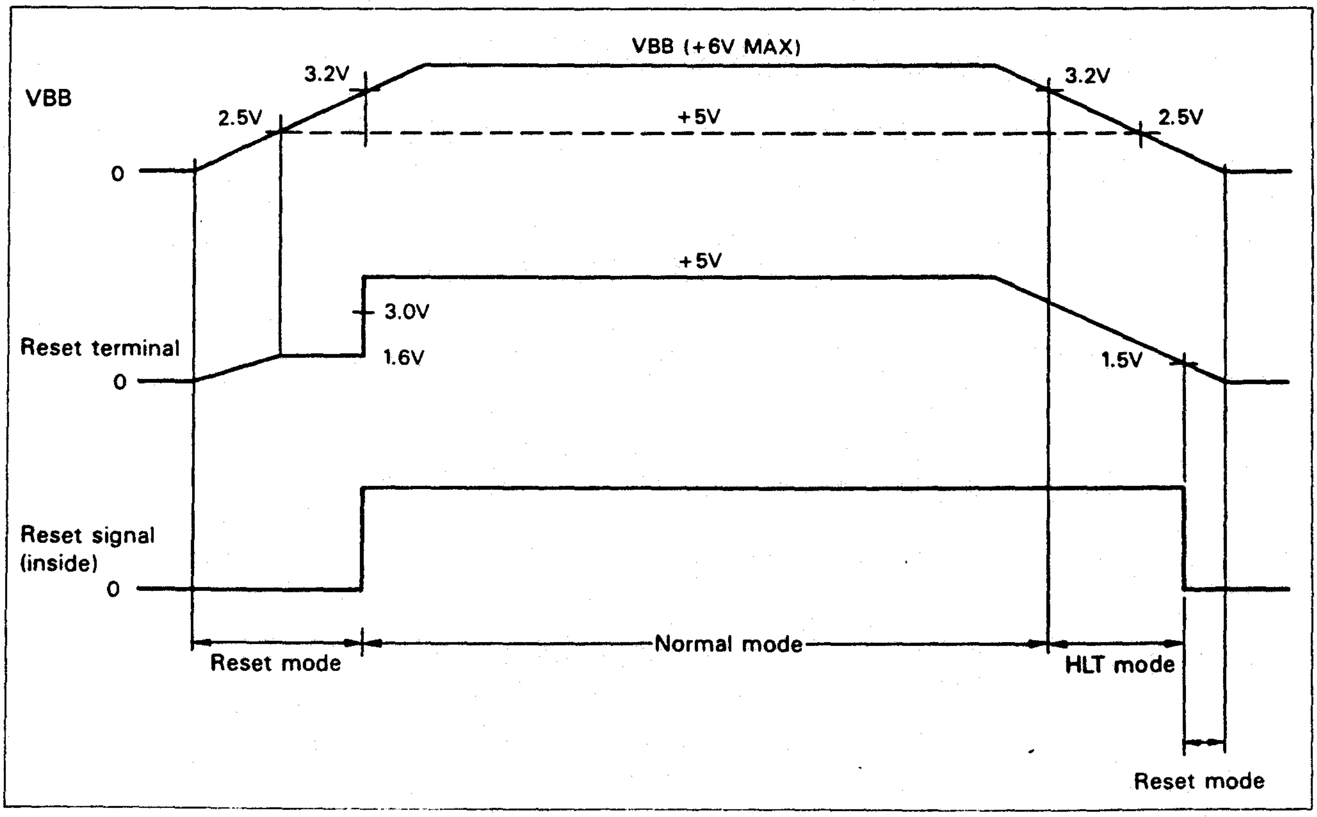

Fig. 3-21 Timing Chart

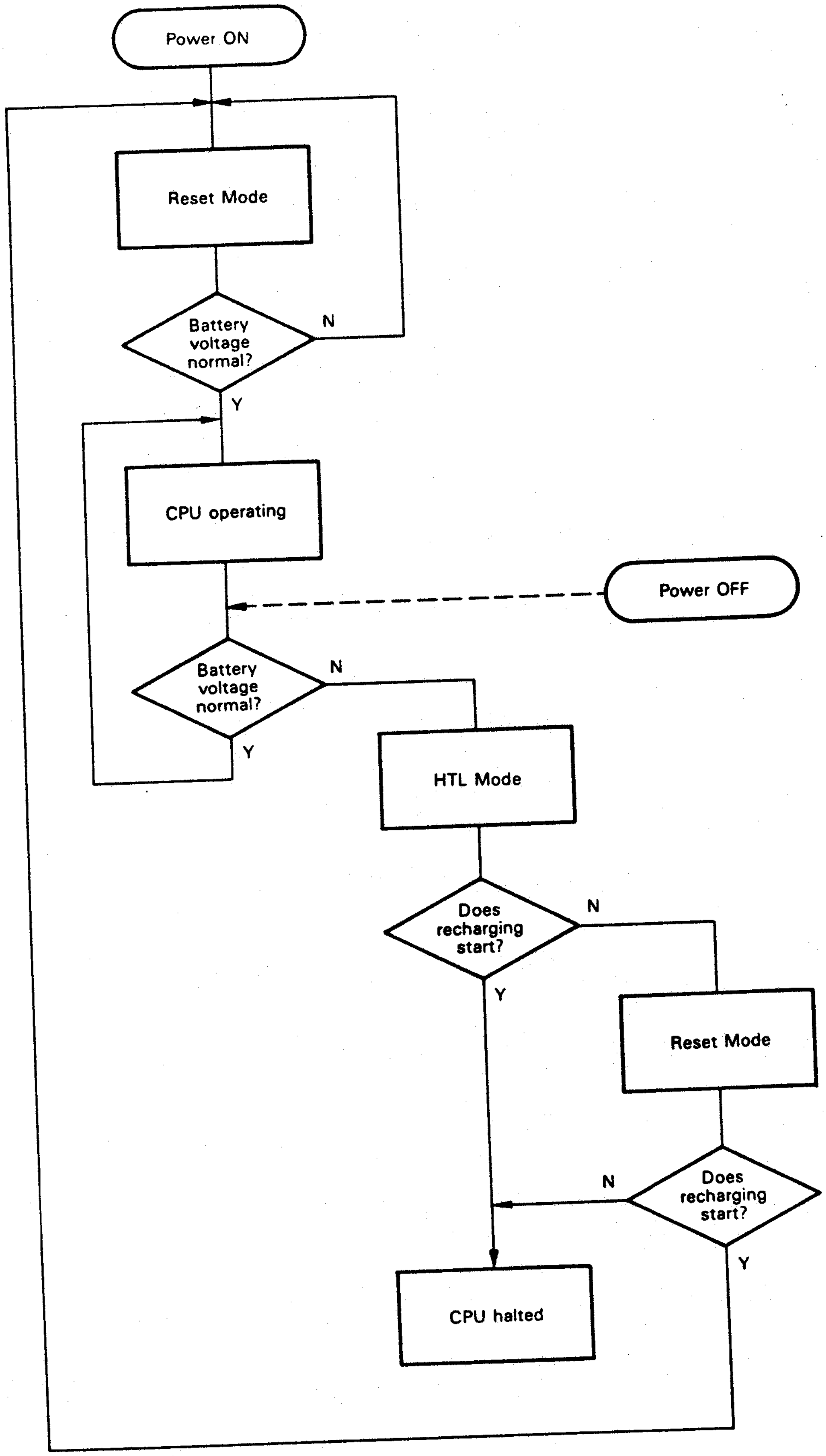

Fig. 3-22 CPU Mode Changes

3.4.8 CPU Ports

The P-40S is built around an 8-bit CPU, the 80C39, shown in Fig. 3-23.
The logic ICs, other than the ROM, are of the CMOS type, resulting in low power consumption.

NOTE: The CPU used in the P-40 is made by OKIDATA Corporation and is not compatible with CPUs of other manufacturers.

The ROM used is either the 2732 or 2764 N-MOS ROM.
The output ports are composed of D type flipflops and the address latches and input ports are composed of D type latches.

When the power is turned on, the oscillator circuit supplies a 6MHz clocking signal to the CPU. Until circuit operation stabilizes, CPU operation is halted by the reset signal. During this time, each of the CPU ports is set to High. However, since the ALE signal is being output, the High is applied to the output port at the rise of the ALE.
The ROM address (00H) is synchronized to the ALE and output to AD0-7 (BUS PORT), then preserved by the address latch (IC) at the fall of the ALE. This causes the lower 8 bits of the ROM address to be specified after the CPU is released from reset.
Since PSEN is not output during reset, the CPU is unable to read the contents of the ROM.

When reset is over, the CPU outputs the upper 4 bits of the ROM address to P20-P23 with PSEN; the contents of address 0 in the ROM is read and the CPU begins operation. From this point on, the CPU will operate according to the program written in the ROM. RD is output only when a command to read the contents of the input port is sent to the CPU.

When the battery voltage fails or the motor operates abnormally, the CPU will execute and HLT command and halt. Accordingly, PSEN and ALE are not output and power consumption by the circuits is lowered.
To reactivate the CPU, it is necessary to turn on the power once more.

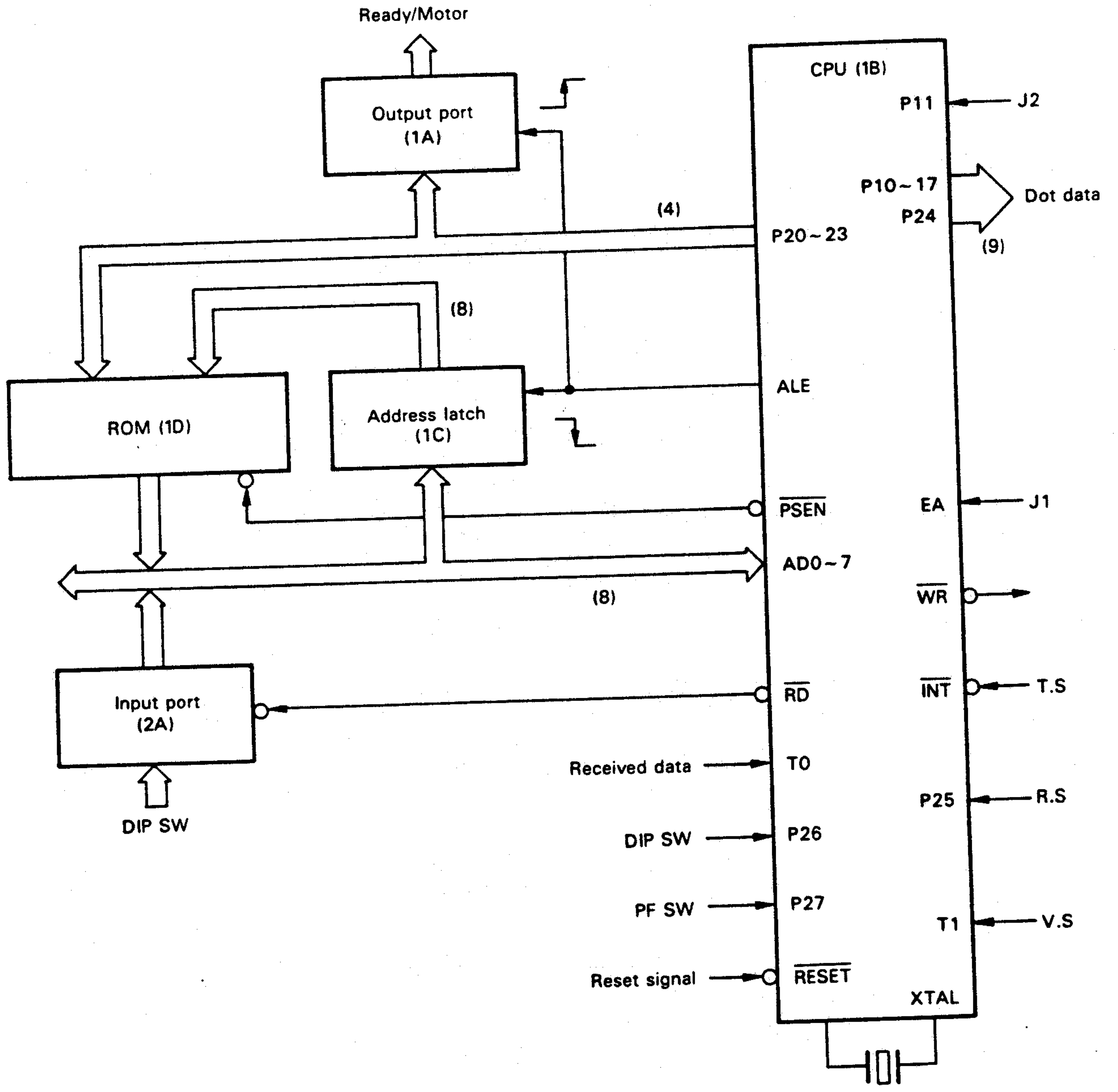

Fig. 3-23 CPU Configuration

Table 3-3 CPU Terminal Status

Output	RESET	NORMAL	HLT	Output	RESET	NORMAL	HLT
1	H	H	H	21	H	P	H
2	SIN	SIN	SIN	22	H	P	L
3	SIN	SIN	SIN	23	H	P	H
4	L	H	H	24	H	P	L
5	H	H	H	25	H	H	H
6	H	H	H	26	H	H	H
7	H	H	H	27	H	H	H
8	H	P	H	28	H	H	H
9	H	PSEN	H	29	H	H	H
10	H	H	H	30	H	H	H
11	ALE	ALE	H	31	H	H	H
12	P	P	L/H	32	H	H	H
13	P	P	L/H	33	H	H	H
14	P	P	L	34	H	H	H
15	P	P	H/L	35	H	H	H
16	P	P	L	36	H/L	H/L	H/L
17	P	P	H/L	37	H	H	H
18	P	P	H/L	38	H	H	H
19	P	P	L/H	39	L	L	L
20	L	L	L	40	H	H	H

Abbreviations: H: high level; L: low level; P: pulse output
NORMAL: printer stand-by status

The function of each terminal of the CPU is described below.

- P20~P23 (PORT 2)
  This port is an input/output port, used as an output port only, for outputting the upper 4 bits of the ROM address and the data from output port (1A).

- ALE (ADDRESS LATCH ENABLE)
  The ALE is an outside sync signal. The ROM address output from the bus port is latched at the fallingedge of the ALE signal, and P20-P23 data is latched at the rise of the ALE signal.

- $\overline{\text{PSEN}}$ (PROGRAM STORE ENABLE)
  This signal is output when reading ROM data to the CPU.

- AD0~7 (BUS PORT)
  The bus port is an input/output port on which the lower 8 bits of the ROM address are output. The ROM data read with the $\overline{\text{PSEN}}$ signal are input to the CPU via the bus port.
  In addition, the input port data read with the $\overline{\text{RD}}$ signal are also input to the CPU from the bus port.

- $\overline{\text{RD}}$ (READ)
  This signal is output when data from an outside input port is read from the bus port into the CPU.

- TO (TEST O)
  If an input signal is sent to TO, then a conditional jump instruction is executed. Data sent from the host device is detected here.

- P26 (PORT 2)
  This port is an input/output port used as an input port only. The status of the DIP switches is read here.
  Automatic line feed with carriage return Yes ...... SW 1-1: ON
  Automatic line feed with carriage return No .... SW 1-1: OFF

- P27 (PORT 2)
  This port is an input/output port used as an input port only. The manual paper feeding switch status is read here.
  PF switch ON: paper feed

- RESET
  When reset input goes low, the CPU is reset.
  At reset, the $\overline{\text{PSEN}}$ signal is inhibited and PORT 1 and PORT 2 become H level.
  The ALE and bus ports will output a signal even when the CPU is being reset.

- T1 (TEST 1)
  When an input signal is sent to T1, a conditional jump instruction is executed. Diminished battery voltage is detected here.
  L level: Normal condition
  H level: Battery voltage low

- P25 (PORT 2)
  This port is an input/output port used as an input port only. The status of the home sensor in the printer mechanism is read here.
  L level: ON Print area
  H level: OFF Home position

- $\overline{\text{INT}}$ (INTERRUPT)
  When this input is set to L, the CPU generates an interrupt signal. The CPU is interrupted according to the timing detector in the printer mechanism.

- $\overline{\text{WR}}$ (WRITE)
  This signal is output when writing data from the CPU bus port to external memory.

- EA (EXTERNAL ACCESS)
  When this input is set to H, the CPU is able to utilize external ROMs. Jumper J1 is not connected here.

- P10~P17 (PORT 1), P24
  This port is an input/output port used as an output port only. The character data for the thermal head is output here and the current flow to the thermal head is controlled accordingly.

- P11 (PORT 1)
  This port is an input/output port used as an input port only. This input reads the status of jumper line J2, used to select the international character set when the power is turned on. J2 determines the character patterns when the self-test is printed.
  J2: ON ASCII
  J2: OFF JIS
  When the CPU reads these conditions, it sets PORT 1 to floating.

- XTAL
  This is the terminal for the oscillator and connects the oscillator crystal.

Print Buffer
A RAM is incorporated in the CPU IC and 86 bytes (86 characters) of this are utilized as the printer buffer.
When more than 86 bytes of data must be printed on one line in bit image printing, the P-40S executes divided printing.
For single density bit image printing, there are 256 dot positions per line. Therefore, the data is divided into 3 parts, then printed.
For double density bit image printing, one line contains 480 dot positions. Therefore, the data is divided into 6 parts, then printed.

Double Buffering
At data reception through the RS-232C, data is generally received one character at a time. If the CPU receives 1 character of data, it is stored in the print buffer.
Some host machines ignore the DTR signal and send 2 characters of data. The P-40S can continuously accept up to 2 characters of data without error. But data exceeding this will be ignored.

3.4.9 Interface Circuit

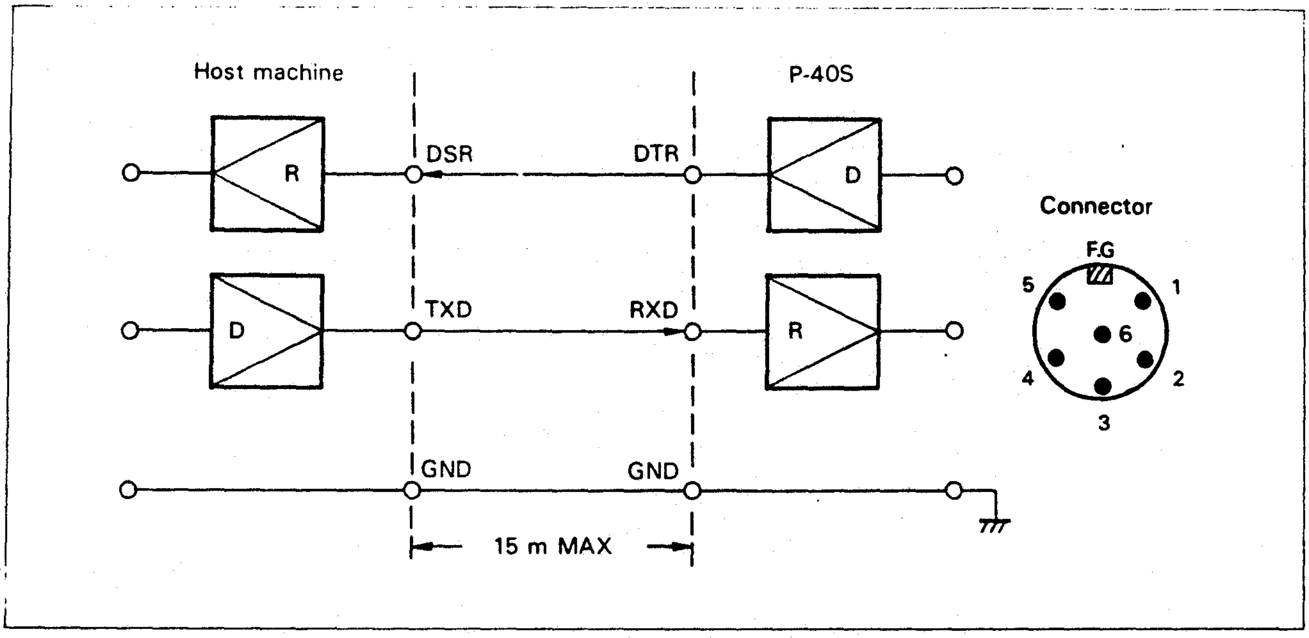

Fig. 3-24 Interface Circuit

3.4.9.1 Interface Cable

The printer operates upon receiving the 7-bit or 8-bit character codes sent from the host machine. The P-40S receives these character codes as serial data via the RS-232C interface. Therefore, the P-40 can be connected to any host machine that has the RS-232C interface.

The connector, however, is specialized for the P-40S and is not of the standard RS-232C type, although this printer is compatible to the RS-232C standard. Different types of cables are available for connecting the P-40S with various host machines.

Three signal lines need to be connected between the host and the P-40S. A distance of up to 15 m is allowed for connection between printer and host.

Table 3-4 shows the connections between the RS-232C and P-40S connectors.

Table 3-4 Connection between the RS-232C and P-40S Connection

Terminal No.	RS-232C		Terminal No.	P-40S	
1	FG	Frame Ground	FG	FG	Frame Ground
2	TXD	Transferred Data	3	RXD	Received Data
6	DSR	Data Set Ready	2	DTR	Data Terminal Ready
7	SG	Signal Ground	5	GND	Signal Ground

3.4.9.2 Switch Settings

For the printer to receive data from the RS-232C, the following parameters must be set.

1. Bit rate (data transfer rate)
2. 7-bit or 8-bit data format
3. Presence or absence of the parity bit
4. Even or odd parity

On the P-40S, these settings are made with the switches on the rear of the case. Any mistake in the settings will cause the printer to print erroneous characters or not to print at all.

The standard switch settings for the P-40S are shown in Table 3-5. For specialized models, please refer to Chapter 7.

Table 3-5 Standard Switch Setting

SW No.	Function	ON	OFF	Factory setting
1	Automatic paper feeding following CR	Enabled	Disabled	OFF
2	Parity check	Enabled	Disabled	OFF
3	EVEN/ODD parity selection	Even	Odd	OFF
4	Word length selection	7 bits	8 bits	OFF

SW No.	75	110	134.5	150	200	300	600	1200	1800	2400	9600	4800
5									O	O	O	O
6					O	O	O	O				
7			O	O			O	O			O	O
8		O		O		O		O		O	O	

Bit rate BIT/SEC (O designates switch OFF)

3.4.9.3 Handshaking

As shown in Figure 3-24, the RS-232C interface circuit consists of the RS-232C driver and receiver. Data is received by the P-40S from the host computer via handshaking. Figure 3-25 illustrates the manner in which handshaking is executed.

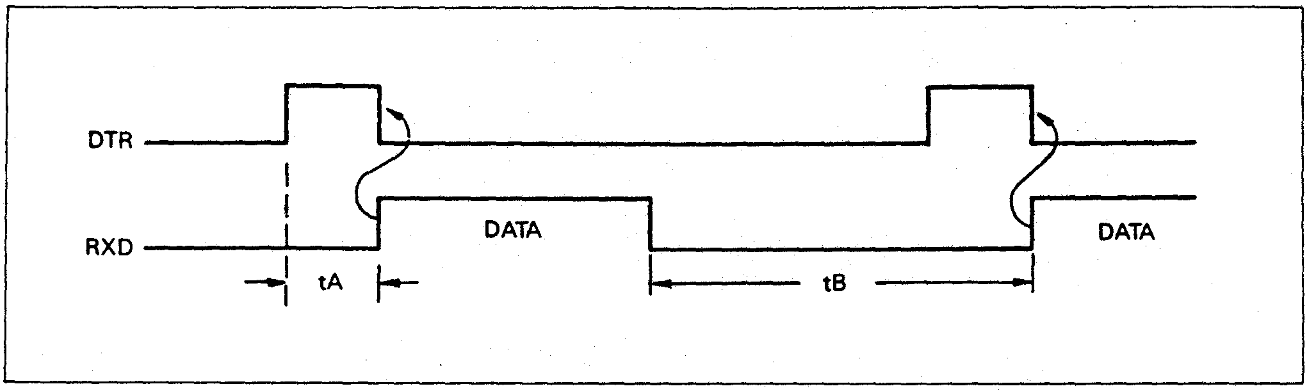

Fig. 3-25 Handshaking

1. When the printer is ready to receive data, DTR is set to High.
2. When the host machine receives this, it begins to send data one character at a time.
3 When the printer begins to receive data, DTR goes Low and 1 character of data is taken in.
4. The printer then processes the data. When processing is completed, the printer once again sets DTR to the H level and waits for the next data.
   During this time (tb), the host computer is preparing the next data to be sent.

3.4.9.4 Special Features

Generally, once the printer sets DTR to H level, this condition is maintained until data is received. However, when the data preparation time (tb) of the host computer is long, the P-40S sets DTR automatically to the L level even when data has not been sent. Therefore, the following restrictions are applicable.
The host machine is required to send data within 1.5 ms after receiving DSR. Failure to do so may disable the printer.
This period is the P-40S's waiting time. Even after the printer sets DTR to the L level, it checks whether or not data is being sent for a period of 1.5 ms.

The reason that DTR is automatically set to the L level is that the P-40S has no line ON/OFF switch; manual paper feeding is carried out during on-line status, when printing is possible at any time. Therefore, DTR is switched between the H and L even when the P-40S is in waiting mode; if no data is received while DTR is at the H level, the manual paper feeding switch is checked while it is at the L level.

[illegible] DTR and RXD

Fig. 3-26 shows the [illegible] P-40S. The time [illegible] character of data (tD) is determined [illegible] rate; at the same time the status of DTR is also determined.

During the DTR wait time, the H level time becomes approximately the same as (tD), while the L level is fixed at 3.4 ms. Both levels constantly alternate. (from DTR2 to DTR3), and the maximum time for DTR is (tD).

Measuring the H level time makes it possible to know the switch setting for the bit rate.

When data is being received, the time between one DTR to the next DTR is set to twice as long as (tD); it is possible for the printer to continuously read 2 character of data. This allows the printer to correspond to a host computer which sends 2 characters of data continuously in double buffering by using LSI 8251 or the like.

When the bit rate is low or the host machine data preparation time (tB) is short, DTR time (tA) is set at a fixed value. (tA) is a time lag between the point that the host machine receives DTR and the time when data is sent; when this is within 1.5 ms, the P-40S can be connected to the computer.

When the bit rate is high or the host machine data preparation time (tB) is long, the DTR time will change according to (tB).

1. Before the value of (tB) reaches a, the next DTR2 time will be the same as (tA).
2. When (tB) becomes b, the next DTR2 time will become longer than (tA).
3. When (tB) approaches c, DTR2 will automatically be set to the L level. Therefore, the subsequent data will be sent.
   Accordingly, the time lag (tC) is restricted to 1.5 ms.
4. When (tB) becomes d, DTR2 is not received but data is sent with the next DTR3.

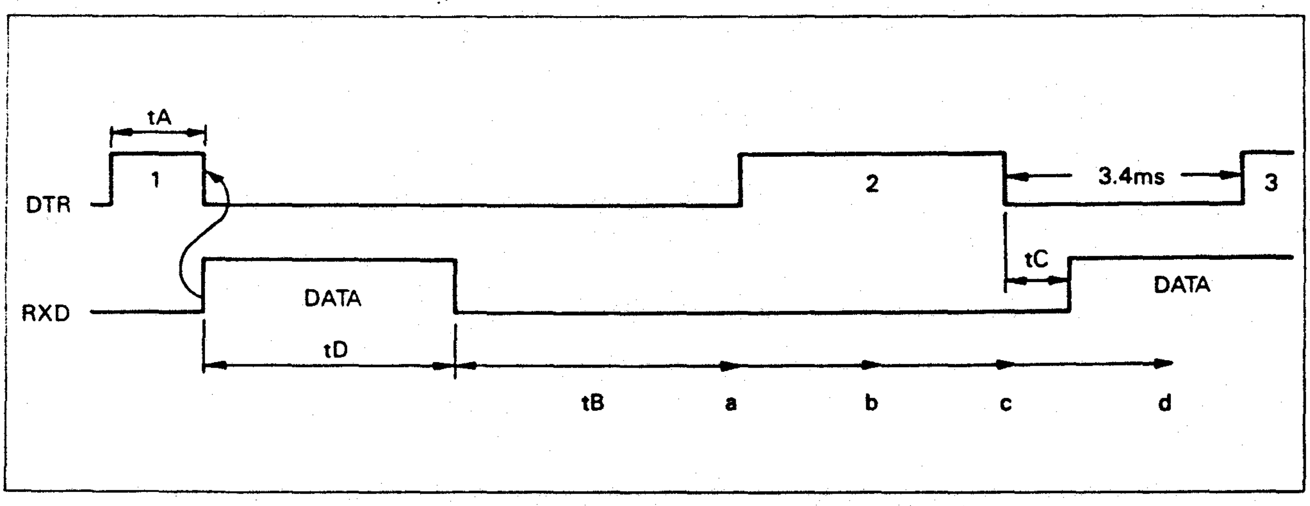

Fig. 3-26 Relationship between DTR and RXD

3.4.9.6 Start-Stop Bits

The P-40S receives the start-stop system data. In the start-stop system, a "0" start bit and a "1" stop bit are added to the data, and this enables data to be sent serially, one character at a time. The START-STOP system is described below. (Refer to Fig. 3-27.)

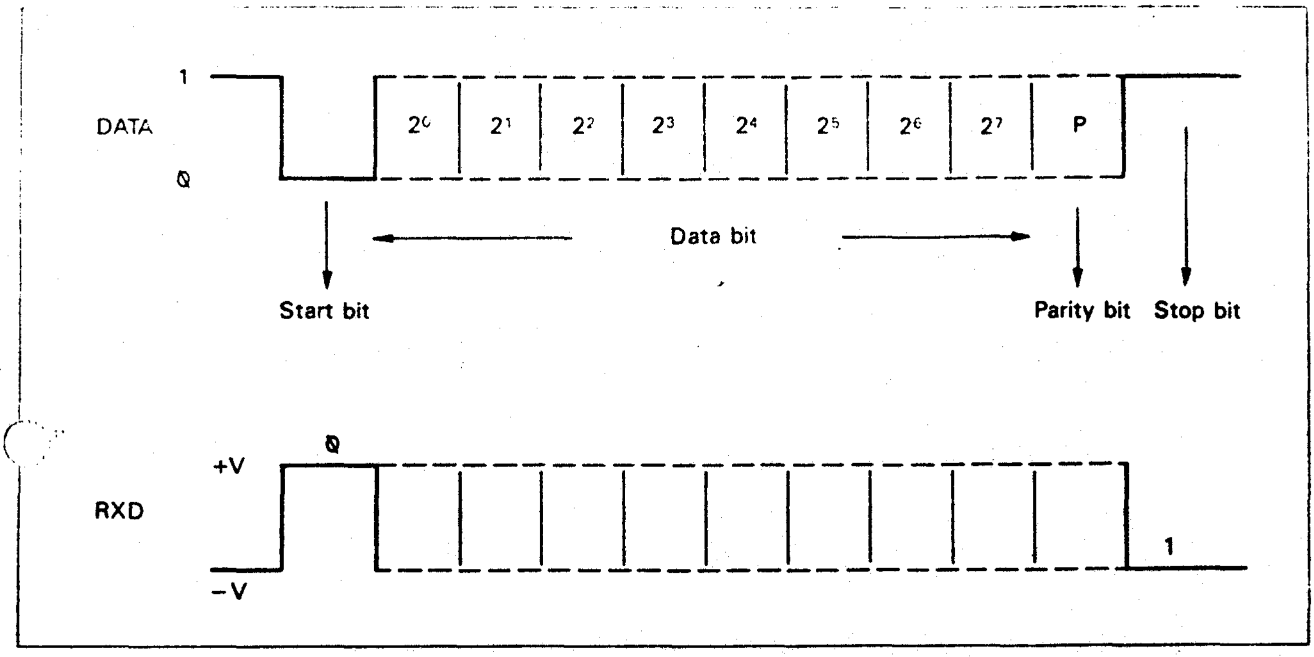

Fig. 3-27 Start-stop Bits

1. When no data is sent, logic is at "1".
2. When the printer receives the start bit (ϕ), it knows that data will follow.
3. The data bit indicates the character code. The switch setting informs the CPU whether the character is of 7 or 8 bits.
   The data bits are sent in order beginning with the lowest bit of the character code.
4. The parity bit is added to the data as required. Upon receiving data, the printer performs a parity check. The parity check is executed by checking the "1" bits in the data and parity bits to see if they are even or odd.
   If an error is detected in the received data, that data is ignored and a "*" is printed in its place.
   The parameters for determining parity are set at the DIP switch.
5. The start bit of the data to be sent next can be judged by adding 1 or more stop bits to the end of the data.

Table 3-6 shows the possible bit settings for the P-40S.

Table 3-6 Bit Settings

Start bit	Data bit	Parity bit	Stop bit
1	7	No parity	1 or more
1	7	Odd parity	1 or more
1	7	Even parity	1 or more
1	8	No parity	1 or more
1	8	Odd parity	1 or more
1	8	Even parity	1 or more

3.4.9.7 Bit Rate

If the bit composition of the data sent and the data transfer speed are established, the printer is then ready to receive data.

After receiving the start bit, the P-40S takes a sampling from the middle of the bits according to the setting of the bit rates on the printer. Even when the bit rate is set correctly, the data cannot be received properly if there is an inconsistency of more than ±3% in the data rate.

The P-40S operates normally if fluctuation in the bit rate is less than ±3%.

Table 3-7

Bit rate	75	110	134.5	150	200	300	600	1200	1800	2400	4800	9600
DTR (ms)	110	73	60	53	41	27	14	7.0	4.7	3.5	1.9	1.0

Table 3-7 shows the possible settings for the bit rate and the H level time for DTR output during the wait period.

Measuring this time will allow verification of whether or not the bit rate is being properly read by the CPU. The DTR has the same length as 8 bits.

3.4.9.8 Driver Circuit

Fig. 3-28 shows the line driver circuit and the output waveform.

This circuit linearly amplifies the output port signal. The waveform shown in the figure for a 4800 BPS transfer rate during the waite period.

The circuit is designed in accordance with the RS-232C standard; an incorrect output connection will cause the circuit to malfunction.

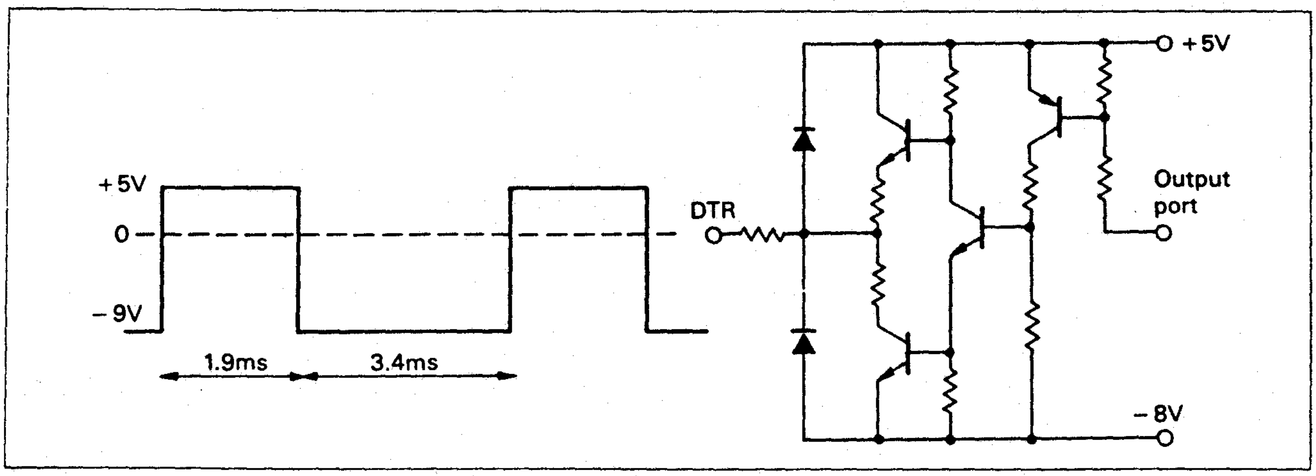

Fig. 3-28 Driver Circuit

The DTR normally outputs a pulse wave. However, there is no output in the following cases:

1. During printing
2. During manual paper feeding
3. When the battery voltage detection circuit is activated
4. When motor operation is abnormal
5. When the power is turned off

3.4.9.9 Receiver Circuit

The line receiver circuit and the input waveform are shown in Figure 3-29.
This circuit inverts and amplifies the RXD wave. Because the RXD wave is of negative logic, the data that the CPU reads is of positive logic.
The CPU reads in data from the input port after detecting the start bit at port T0.
The RXD waveform is determined by the host machine. The P-40S, however, will receive the waveform normally if its H level is between +3 V and +18 V; and the L level is between −3 V and −18 V.

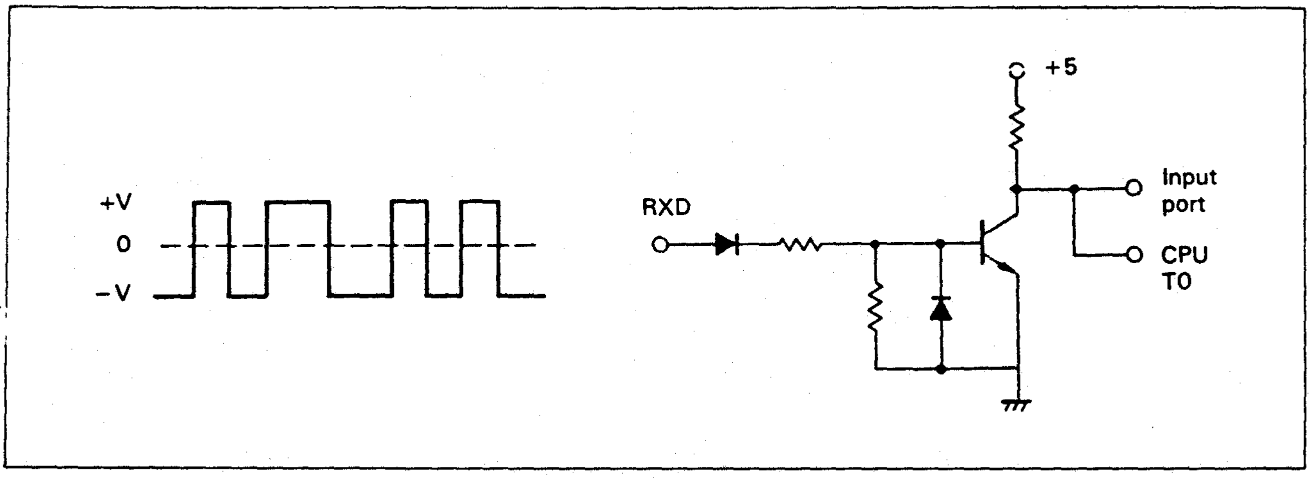

Fig. 3-29 Receiver Circuit

3.4.9.10 Self Test

The self test of the P-40S interface circuit can be executed after connecting DTR to RXD with a short-circuiting plug. If the circuit is normal, the paper feeding pitch should be smaller than that of normal printing. This test, however, does not verify that the switch settings are correct. When the RS-232C interface is used, any incorrect switch setting will disable the printer's normal operation. If the P-40S fails to function properly, execute the self-test. If the self-test is normal, check the cable connections and the switch settings.

3.4.10 Motor Drive Circuit

The M-1210 printer mechanism is driven by a single motor under the control of the motor drive circuit. The direction of motor rotation is reversed when the current direction is reversed.

The motor driving signal is supplied from the output port by program control. When the input R is at the L level, the motor rotates to shift the carriage to the right; when the input L is at the L level, the carriage is shifted to the left. To stop the motor, both L and R are set to the H level.

Since the motor is directly driven by the batteries, the motor speed slows as the power level of the batteries decreases. When the AC adapter is used, the motor speed is constant.
There are 2 motor speeds, determined by print mode: when the printer is printing standard, or enlarged characters, or performing single density bit image printing, the motor is continuously energized; when the printer is printing emphasized or condensed characters, or double density bit images, the motor is energized intermittently so that the print speed is one half that of standard character are printing.

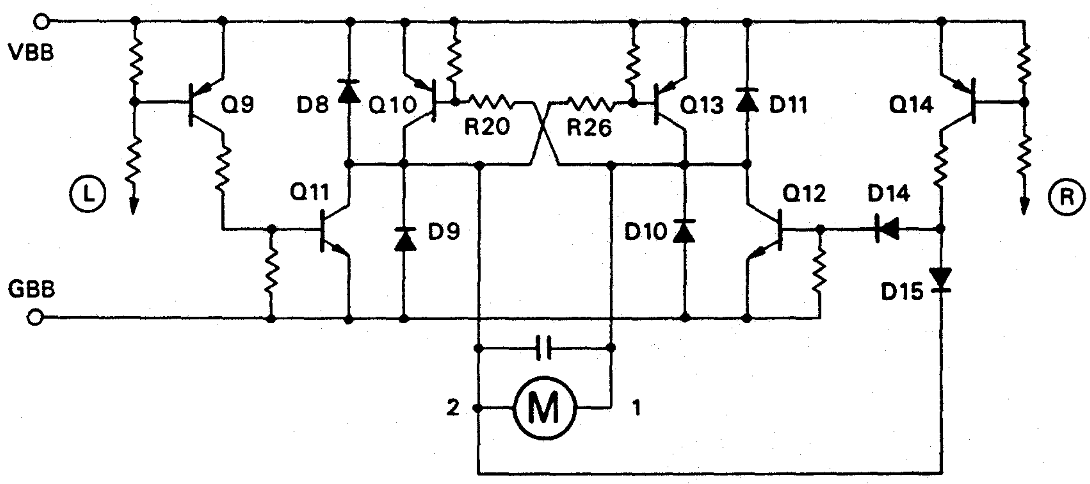

Fig. 3-30 Motor Drive Circuit

Operation of the motor driving circuit is described below. (refer to Fig. 3-30.)
When the input R is at the L level, Q14 and Q12 turn on; and R20 turns on Q10. The current flows from VBB, Q10, motor (2 * 1), Q12, to GBB, causing the motor to rotate.

When the level of the input R becomes high, the current flow to the motor stops. At this time, however, the motor will continue to rotate, generating electromotive force. This current flows through motor 2, D11, VBB, GBB, and D9, acting as a breaking force to the motor.

When the level of the input L is low, Q9 and Q11 turn on, and R26 turns on Q13. The current passes through VBB, Q13, motor (1*2), Q11 and GBB, causing the motor to rotate.
When the level of the input L is high, the current flow to the motor stops. However, the motor will continue to rotate, generating electromotive force.
The current flows through motor 2, D8, VBB, GBB, D10 and motor 1, acting as a breaking force to the motor.

D15 prevents Q11 and Q12 from being turned on at the same time: when Q11 is on, Q12 is turned off by D15.
D14 is used for level shifting.

Fig. 3-31 shows the motor driving circuit waveform during condensed character printing.
The motor current flow is synchronized to the timing signal; the timing is shifted from that of printing so that it does not overlap the current flow for printing.

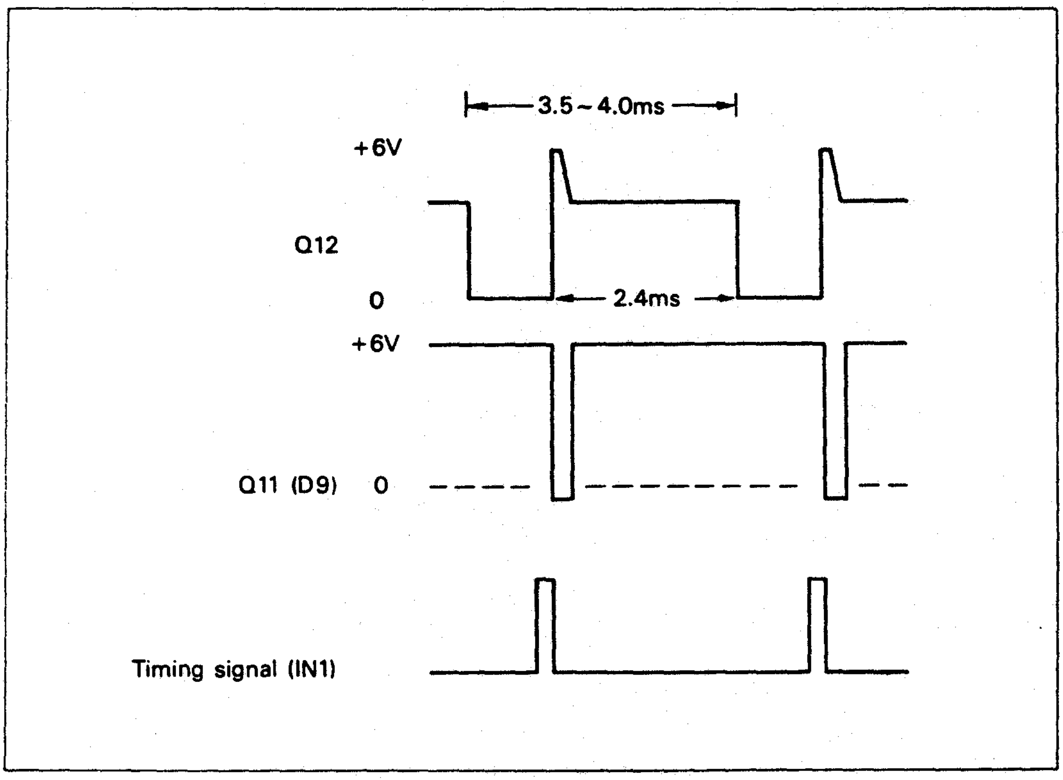

Fig. 3-31 Wave Form of Condensed Character

If a malfunction occurs in the motor drive circuit, the abnormality is detected by the CPU through the timing signal. The CPU then stops the current flow.

3.4.11 Timing Signal Generating Circuit

During printing, timing of current flow to the head is determined by the signal output from the timing detector on the motor shaft.

When the motor rotates, an AC voltage is generated on the timing detector's output. The timing signal generating circuit amplifies this; after waveform modification, the circuit sends this to the CPU as the timing signal.

The CPU determines the position of the head and times the current flow by counting the number of timing signals from the point after detecting the reset signal.

The reset detector turns on when the carriage moves to the right from the home position; this determines the initial position for printing.

The head conduction time is controlled by the LB8700 to ensure that the print density is consistent. The printer controls the current flow to the head according to the battery voltage and surrounding temperature: as the battery voltage becomes low, the conduction time is increased; as the surrounding temperature becomes high, the time is decreased.

The timing generator circuit is described below. (Refer to Fig. 3-32.)

The timing detector output is amplified by AMP2 inside the LB8700, and is output after the waveform is modified by TP2.

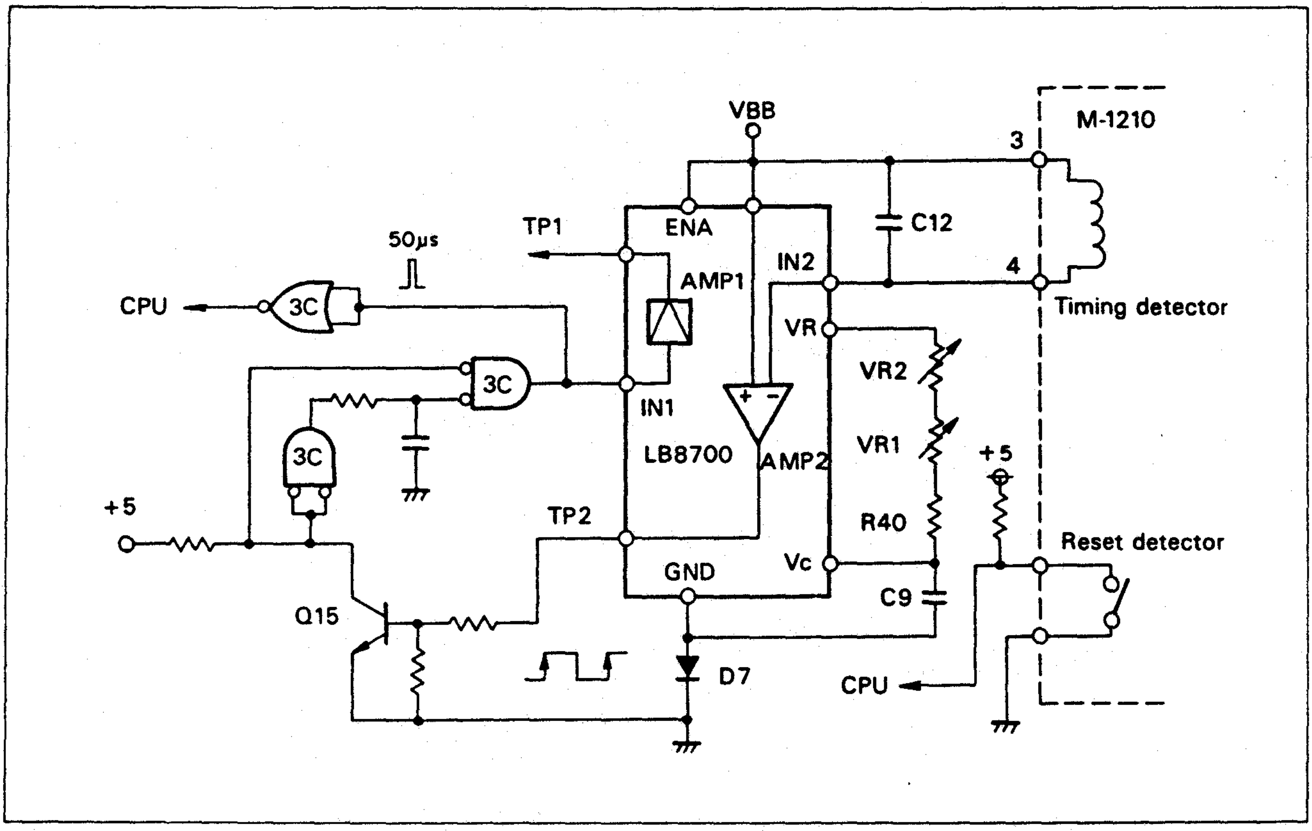

Fig. 3-32 Timing Signal Generating Circuit

Q15 and gate (3C) make a 50μS pulse differentiated with the TP2 rise. This signal interrupts the CPU and triggers AMP1, is a timer circuit; the output pulse width is determined by C9, R40, VR1 and VR2.
TP1 is the head conduction pulse, output by AMP1 with a pulse width corresponding to the battery voltage and surrounding temperature. D7 corrects for LB8700. VR1 and VR2 are used for setting the printing density; these need to be adjusted when LB8700 is exchanged. Adjustmenting VR1 and VR2 requires a special board (SC-87). Refer to Chapter 5 for details.

Fig. 3-33 and 3-34 show sample waveforms at various points in the circuit.
The timing signal sync changes with motor speed; however, the head conduction time TP1 is the same since the energy required for printing is the same.
If the timing signal is not sent due to a malfunction, the CPU stops operation of the motor.

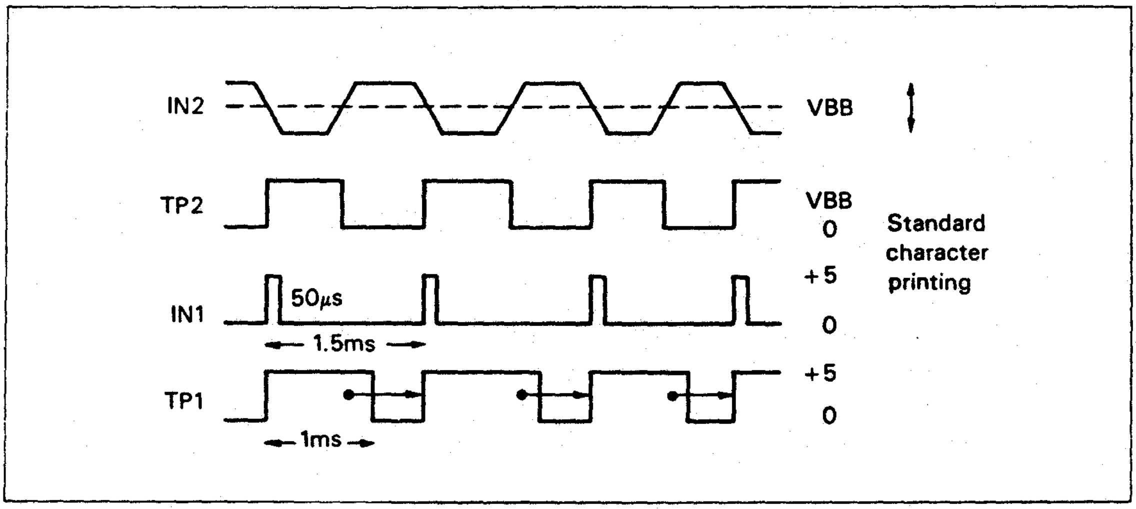

Fig. 3-33 Standard Character Printing

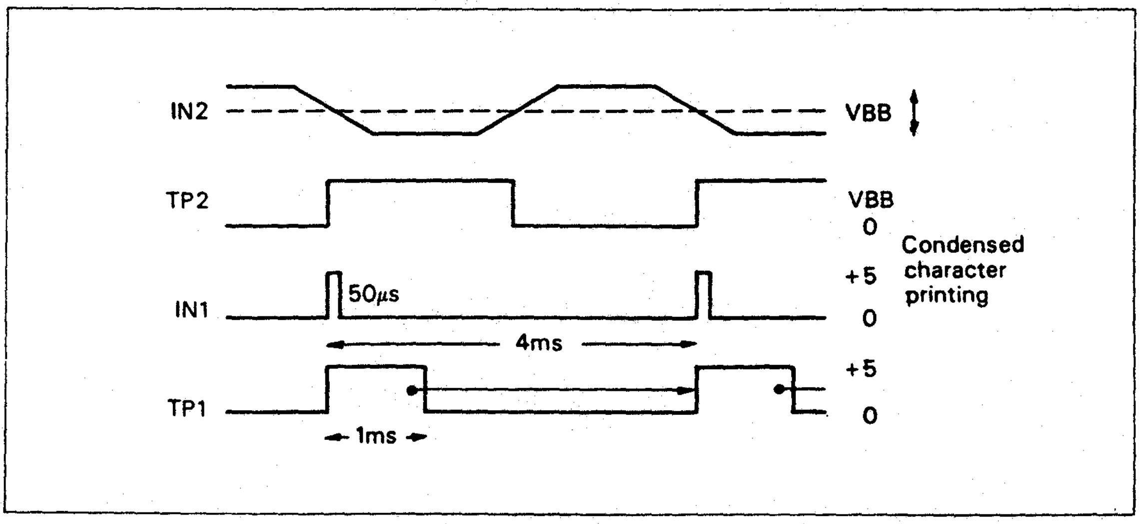

Fig. 3-34 Condensed Character Printing

3.4.12 Head Driving Circuit

The P-40 printhead heating unit consists of 9 dots aligned vertically, each connected to the head driving circuit for respective current flows.

The characters are formed in a 5 × 9 matrix. Printing is executed one 5-dot column at a time, with repeated energizing of the head as it moves from left to right across the page.

Operation of the head driving circuit is described below. (Refer to Fig. 3-35.)

The current flow pulse signal TP1, supplied from LB8700, turns on Q16 and Q18, allowing LB1248 to energize the head while the signal is being applied. Character data from the CPU initiates printing. When the output at P10-P24 is L level, a column is printed.

Characters are printed primarily using P10 ~ P16. P17 and P24 are used to print lower case alphabet and graphics.

For bit image printing, P10 ~ P17 corresponds to data $2^7 \sim 2^0$.

Fig. 3-36 shows a part of the LB1248 circuit for one dot of the heating unit. Q17 restricts the conduction pulse to prevent the head from being continuously energized during condensed character printing.

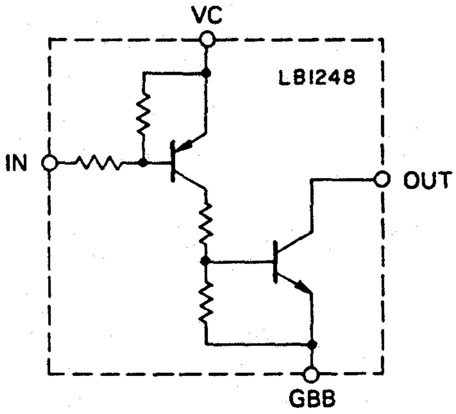

Fig. 3-36 **Head Driving Circuit 2**

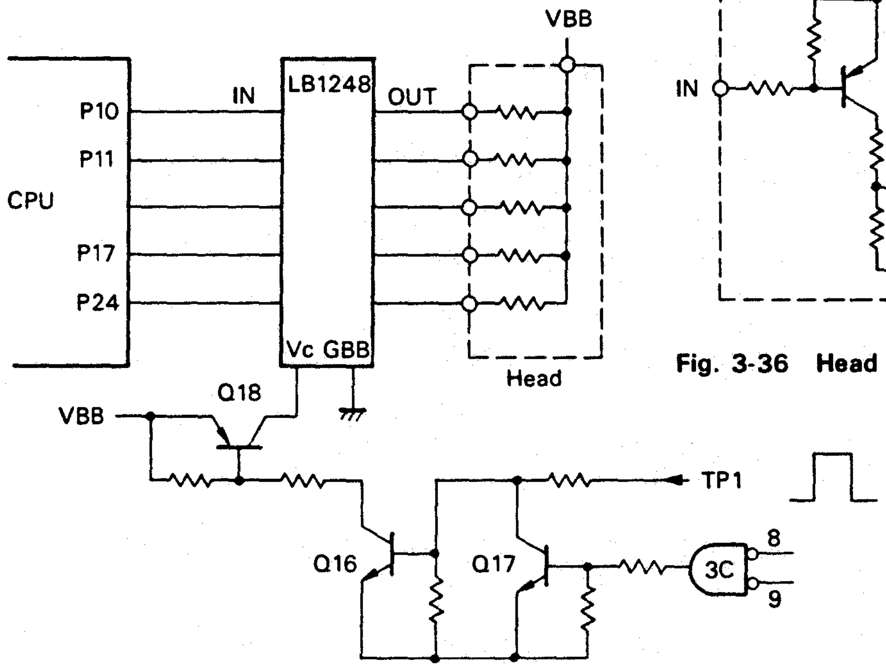

Fig. 3-35 **Head Driving Circuit 1**

Fig. 3-37 shows sample waveforms at various points in the circuit during normal character printing. The timing signal IN1 is generated every time the head moves a distance of one half of a dot. The 9 dots in the heating unit are actually divided into two lines spaced at a distance of one half of a dot. Therefore, all dots in the heating unit are not energized at the same time; the dot data for the #1 heating point side (#1, 3, 4, 6, 9) is output from the CPU with the first print timing signal. After the head moves 1/2 dot pitch, the #2 heating point side (#2, 5, 7, 8) is printed with the second timing signal. As a result, all of the dots are printed in one line.
The conduction pulse signal TP1 will fluctuate according to the battery voltage and ambient temperature.

For standard character printing, 1 dot is printed with 2 timing signals; for enlarged characters, 2 dots are printed with 4 timing signals. Therefore, the printing time per enlarged character is twice that of a standard character.
Figure 3-38 shows the print and character dimensions for each printing mode.

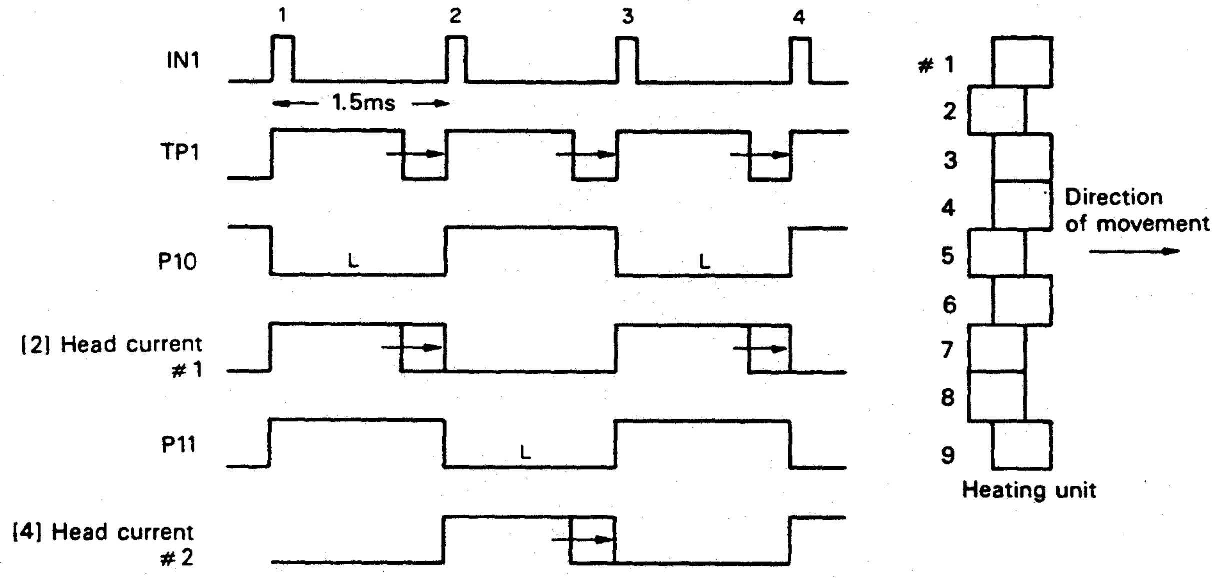

Fig. 3-37 Wave Form of Normal Printing

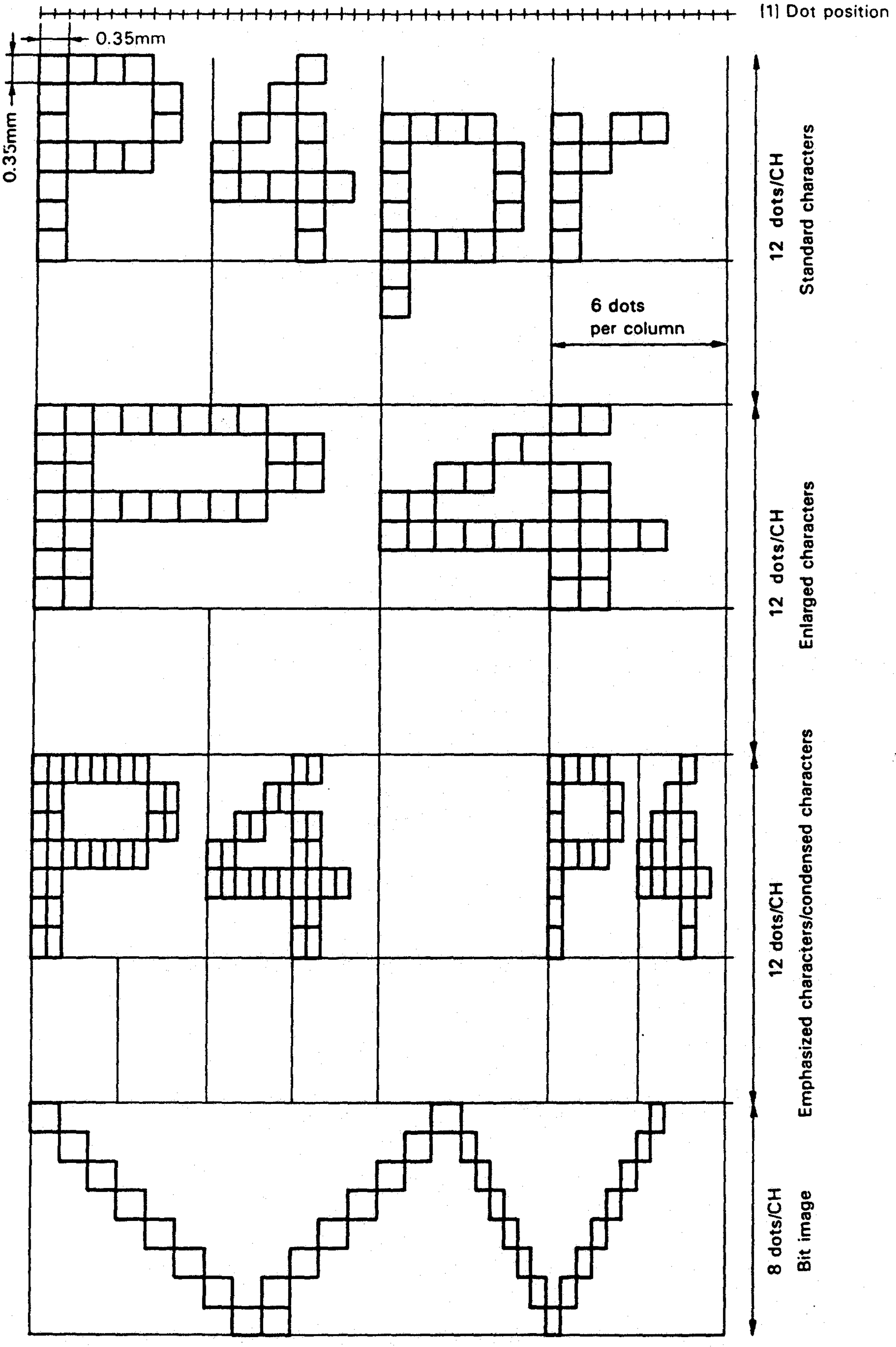

Fig. 3-38 Print and Print Dimensions

Fig. 3-39 shows sample waveforms for various points in the circuit during condensed character printing.
Condensed characters have half the width of normal characters. Therefore, the motor speed is reduced by one half of that used in standard character printing. This makes the time required to print a condensed character approximately the same as that for printing standard characters.
The timing signal IN1 is generated every time the head moves a distance of one half of a dot. For condensed characters, a dot is printed for each timing signal.
The dot data from the CPU is synchronized to the timing signal. This results in all heating points to be energized at the same time.
The conduction pulse signal TP1 causes the current to flow continuously as the battery voltage becomes low. For the purpose of protecting the head, Q17 restricts current flow so that the head is energized only when TP2 is at the H level.

Condensed characters can be printed in 80 or 72 columns.
In either case, the characters are made up of a 5 × 9 matrix; the difference is whether 1 dot or 2 dots spacing is placed between characters.
Emphasized characters have approximately the same width as standard characters and are formed by doubling the width of condensed characters. In the condensed character mode, a single dot is printed for each timing signal; in the emphasized character mode, 2 dots are printed with 2 timing signals. The printing time per emphasized character is twice the time for printing a condensed character.

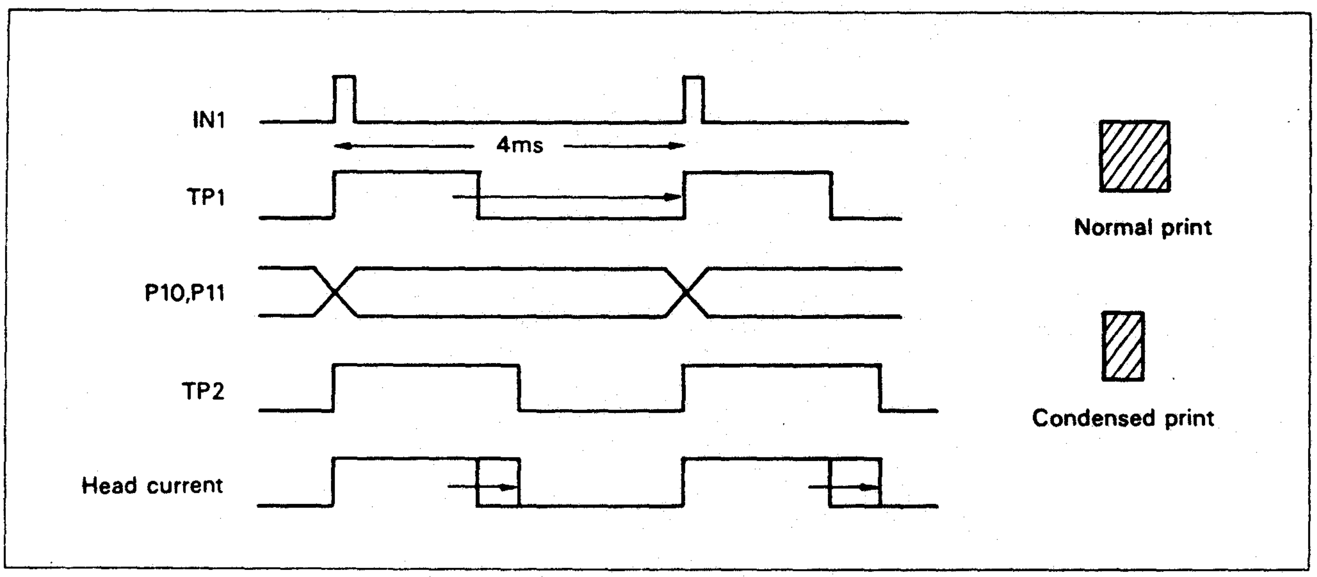

Fig. 3-39 Wave Form of Condensed Character

The head conduction time for standard and condensed characters is the same. However, there is a difference in the print density: condensed characters and emphasized characters are printed to appear darker and sharper. This is related to the characteristics of the thermal paper: as the color formation surface area becomes smaller, the paper surface temperature becomes higher.

The print density becomes higher toward the end of a line, caused by heat accumulated on the head. The structure of the head, print speed, current flow method, etc., have been set to minimize this problem.

3.4.13 Switch PCB

The switch PCB is connected to the main PCB by jumper line, and governs the paper feed switch and power LED. The light emitting diode lights up when the power switch is turned on.
When the PF SW is set to the ON position, manual paper feeding is executed. However, if data is set in the printer, manual paper feeding is not possible until a line feed is executed.
When the power is turned on while the PF SW is being pressed, the printer will begin a self-test.
The PF SW uses conductive rubber for contacts. Therefore, the ON resistance is approximately 100 Ω.

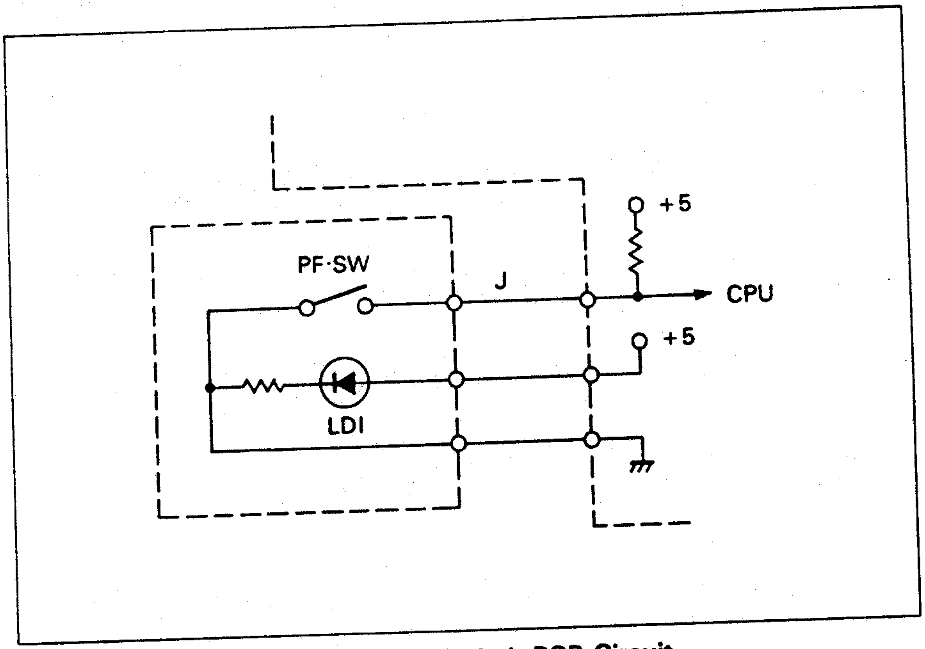

Figure 3-40 Switch PCB Circuit

CHAPTER 4
DISASSEMBLY/ASSEMBLY AND ADJUSTMENT

4.1 Unit Disassembly/Assembly And Adjustment 4-1
4.1.1 Subassembly Removal 4-2
4.1.2 Subassembly Replacement 4-3
4.1.3 Printhead Removal 4-4
4.1.4 Printhead Replacement 4-5
4.2 Mechanism Of Model-1210 4-6
4.2.1 Removal From The Frame 4-7
4.3 Adjustment Procedures 4-10

LIST OF FIGURES

4-1 Construction of the P-40 4-1
4-2 External View of the P-40 4-3
4-3 Removing the Head 4-4
4-4 Head Set 4-5
4-5 Head Cable Clamping 4-5
4-6 External View of M-1210 4-6
4-7 Bottom View of M-1210 4-6
4-8 Removal from Frame A 4-7
4-9 Removal from Frame B 4-8
4-10 Removal from Frame C 4-9
4-11 SC-87 Board 4-10

4.1 Unit Disassembly/Assembly And Adjustment

The P-40 disassembles easily to the subassemblies shown in Fig. 4-1, using only a No. 2 phillips screwdriver and a No. 1 standard screwdriver. (The securing screws for the case are 8 M3 × 10 tapping screws.) The M-1210 printer mechanism is made of snap together plastic and is not repairable, except for printhead exchange. Malfunctioning printer mechanisms should be replaced as a unit.

DANGER

Turn the power siwtch to off, disconnect the AC Adaptor from the wall outlet (if applicable) and remove the roll paper before disasembling the printer.

WARNING

Never adjust the volume setting on the circuit board unless the SC-87 board is connected.

During reassembly, make certain that no part or cable blocks the movement of the printhead or interferes in any way with the M-1210 mechanism.

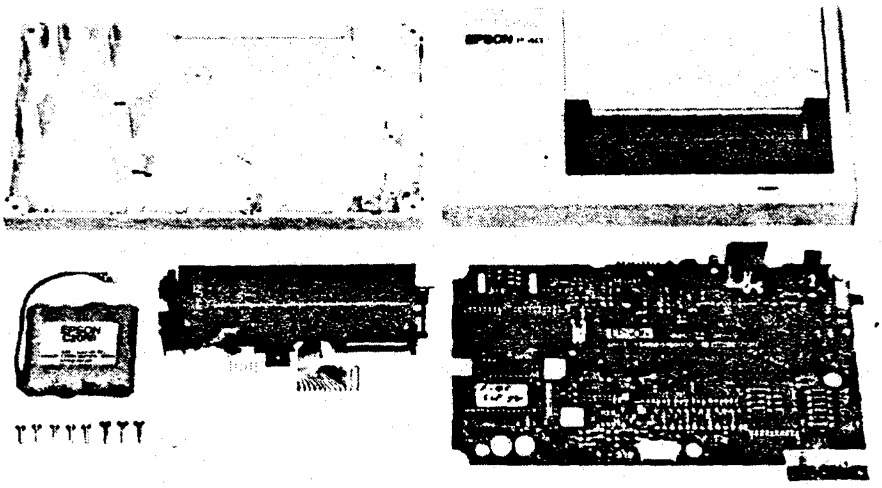

Fig. 4-1 Construction of the P-40

<table>
<tr><td colspan="2">1</td><td>2</td></tr>
<tr><td>2</td><td>5</td><td rowspan="2">5</td></tr>
<tr><td colspan="2">6 7 8</td></tr>
</table>

1 Lower case
2 Upper case
3 Battery
4 M-1210 mechanism
5 Printed circuit board
6 Screws
7 Knobs
8 Interface cover

The following procedures describe P-40 disassebly to the subassembly level. Reassembly of the unit is described in Section 4.1.2, and requires adhesive (screw lock green) to secure some of the components. Printhead exchange is discussed in Sections 4.1.3 and 4.1.4, and requires a small pair of tweezers in addition to the above tools. Refer to Section 4.2 to adjust VR1 and/or VR2 following printhead exchange.

> **NOTE:** During repair, place a cloth over the work surface to protect the case from damage.

4.1.1 Subassembly Removal

(1) Turn the printer upside down and remove the 5 case securing screws.
(2) Lift the upper case to remove it.
(3) Remove the interface cover.
(4) Disconnect the batteries from connector CN3.
The connector is locked; insert a screwdriver into the gap between the plug and the jack, and pull the plug upward to remove it.
(5) Remove the Paper feed (PF) knob.
(6) Remove the securing screw for the control switch PCB to disconnect the board from the lower case.
(7) Remove the 2 screws which secure the M-1210 mechanism. A portion of the mechanism is inserted into the lower case. Remove the mechanism from the case by carefully lifting it; place the mechanism on the work surface so that it faces you for repair.
(8) Disconnect the mechanism cable from CN4 and carefully lift the cable, making sure it is not bent.
(9) Insert a screwdriver beneath the cover of CN5 to unlock the connector, then lift the cable and remove the mechanism.
(10) Remove the circuit board from the lower case. The circuit board is not attached to the bottom case; the batteries and circuit board are held in place by the upper and lower cases.
(11) Remove the power switch knob.

4.1.2 Subassembly Replacement

(1) Remove dust and plastic spurs from inside the lower case.

(2) Place the power switch knob on the power switch and set the circuit board into the lower case.

(3) Insert the M-1210 mechanism cable into the CN5 socket, place the connector cover in position, and lock the cable. Next, insert the cable into CN4. Make sure that the cable is not bent.

(4) Dust off inside the mechanism, and set the mechanism into the lower case.

(5) Secure the mechanism to the lower case with 2 screws.
Confirm that the mechanism gears do not come in contact with any parts on the circuit board.

(6) Set the switch PCB on the lower case and secure it with a screw.

(7) Apply adhesive to the screws (3 points).

(8) Attach the PF knob, paying attention to the direction of the PF sign.

(9) Place the interface cover into the groves on the lower case.

(10) Make sure that the power switch is set to the off position, then connect the batteries to CN3.

(11) Place the batteries into the lower case holder so that the label faces upward. Carefully position the lead wires.

(12) Using the interface cover as a guide, place the upper case onto the lower case. Adjust the LED lamp position so that it can be seen through the window on the upper case.

(13) Turn the case upside down and secure the lower case with the 5 screws.

(14) Set the roll paper in the printer and print the self-test. Verify that the LED lights up and the printer operates normally.

(15) Clean the outside of the case.
(If necessary, use ethyl alcohol for cleaning.)

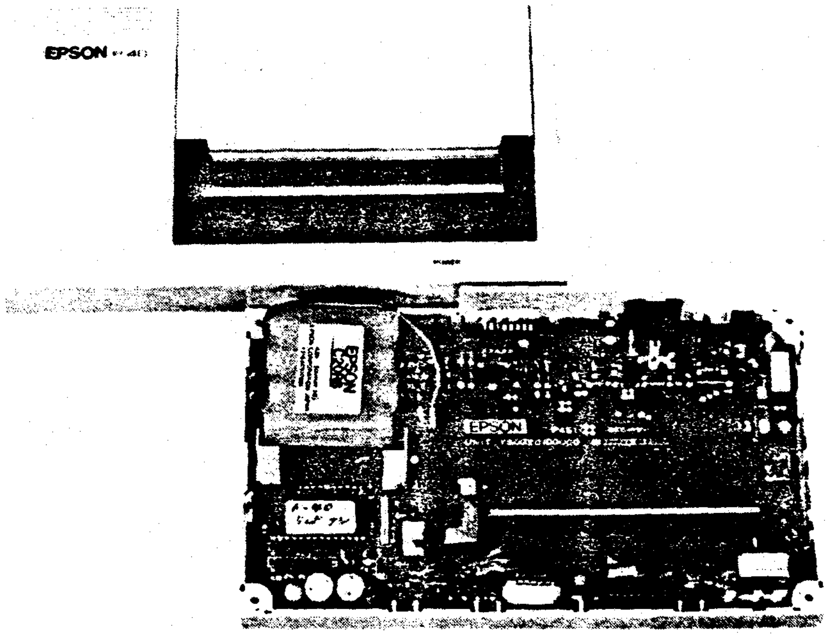

Fig. 4-2 External View of the P-40

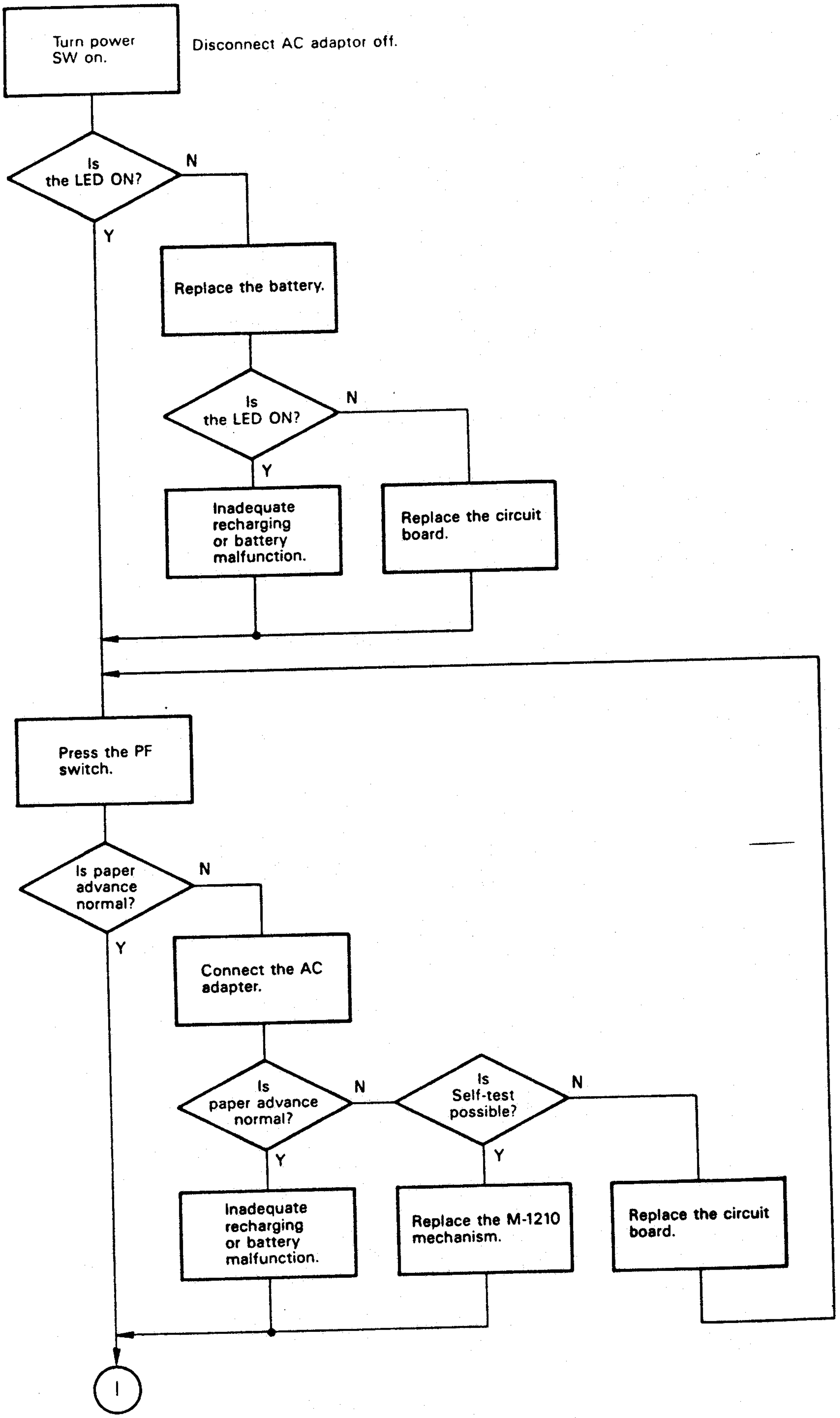

Fig. 5-1A Unit Exchange Flowchart

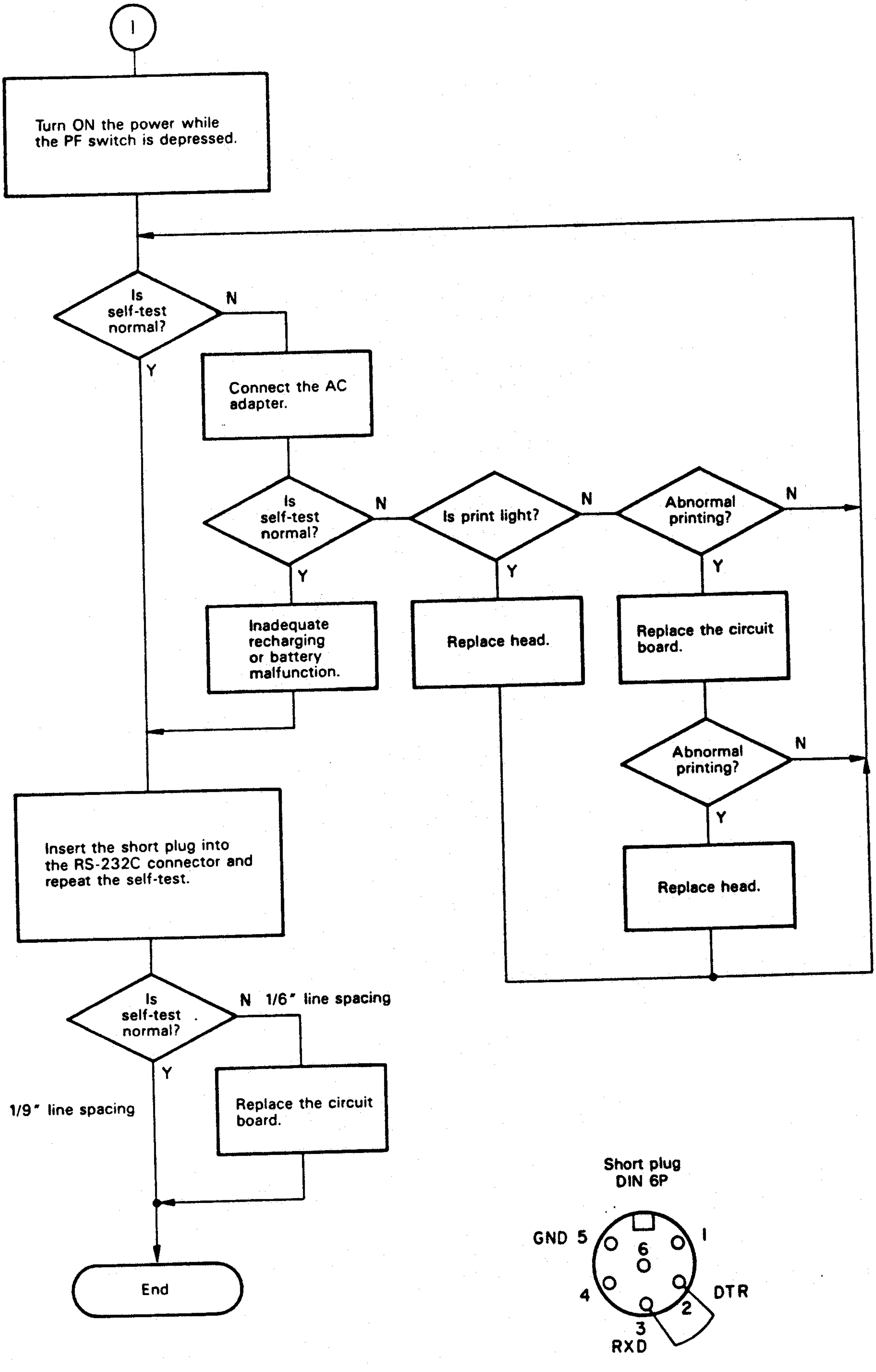

Fig. 5-1B Unit Exchange Flowchart

5.2 Component Level Troubleshooting

The following flowchart (Figure 5-2) is designed to enable a technician with basic working knowledge of electronics to perform component repair of the P-40, even if the technician is not familiar with the circuitry of the unit. As in Modular Troubleshootng, this section uses the self test to identify malfunctioning components. A portion of the interface circuit is not tested during the standard self test, but is testable when DTR and RXD are connected. When DTR and RXD are connected, the self test line spacing should change to 1/9 inch; if the circuit is malfunctional, the spacing will remain 1/6 inch. If the flowchart procedures do not isolate the malfunction, replace the main circuit board and retest. Varify all reparis by repeating the self test and examining the printout.

NOTE: In the flowchart, the abbreviation "ON" means that the unit or signal is on and will not turn off.

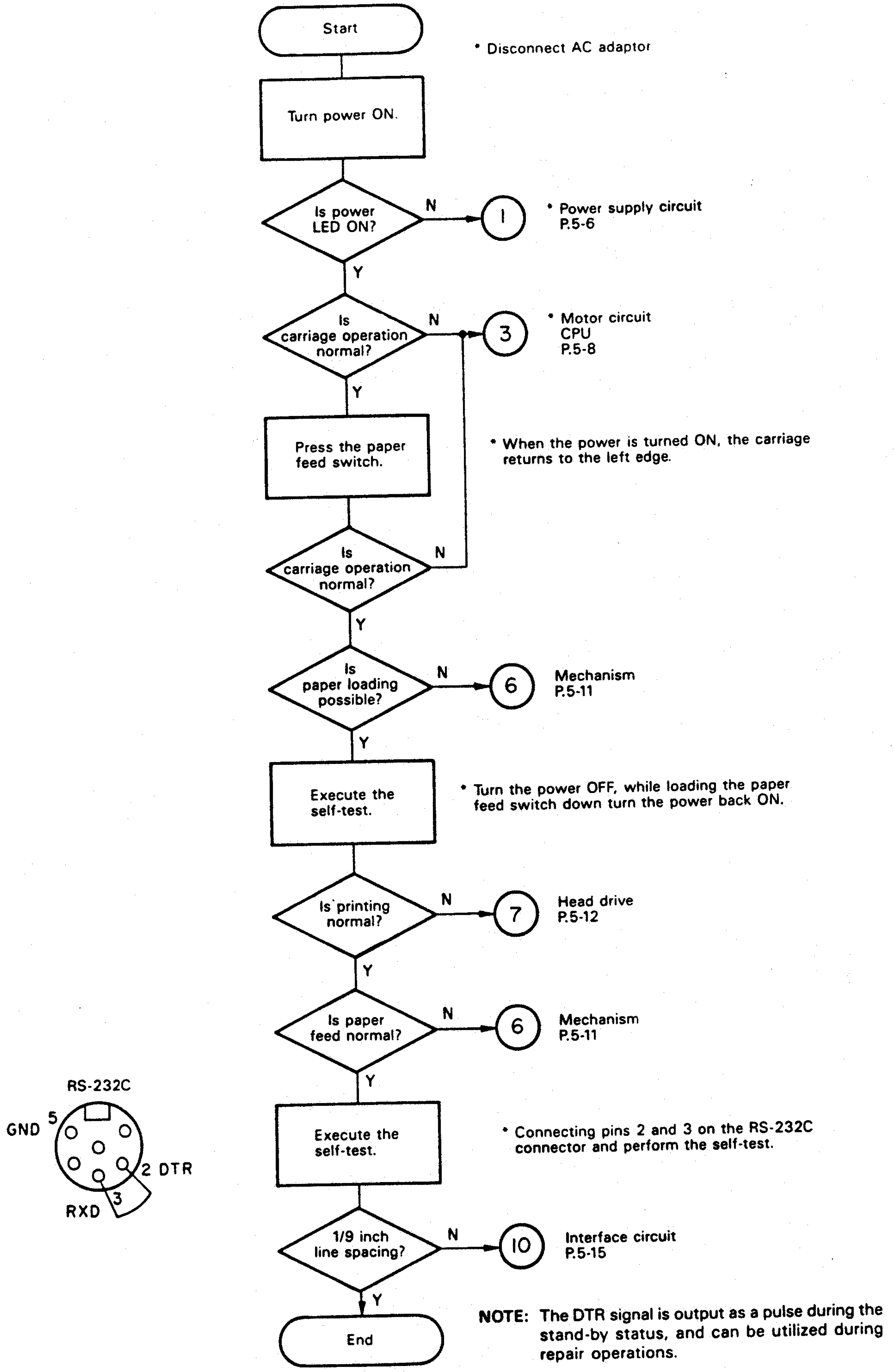

NOTE: The DTR signal is output as a pulse during the stand-by status, and can be utilized during repair operations.

Fig. 5-2 Component Exchange Flowchart

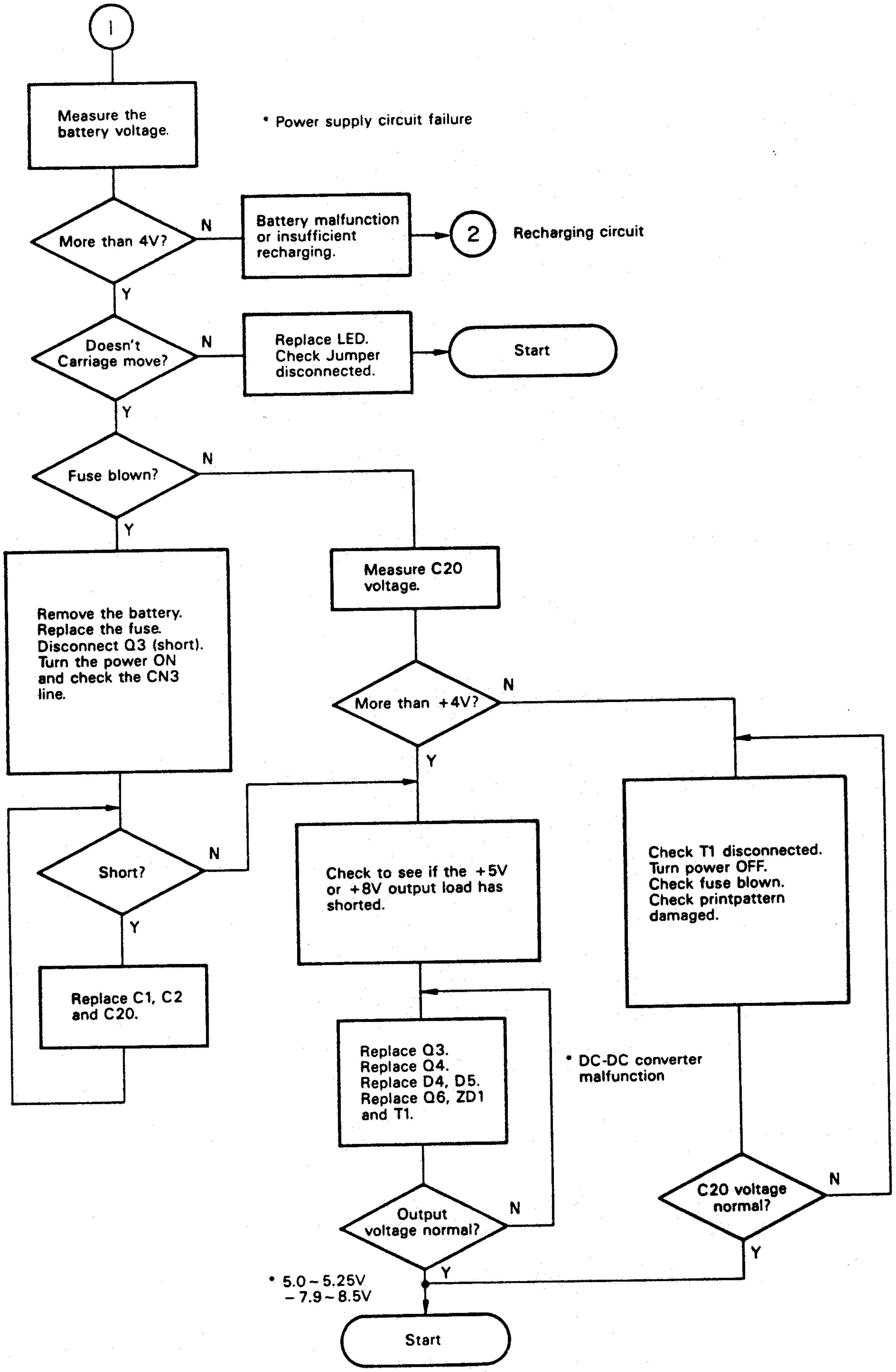

Fig. 5-3 The Power LED Does Not Light

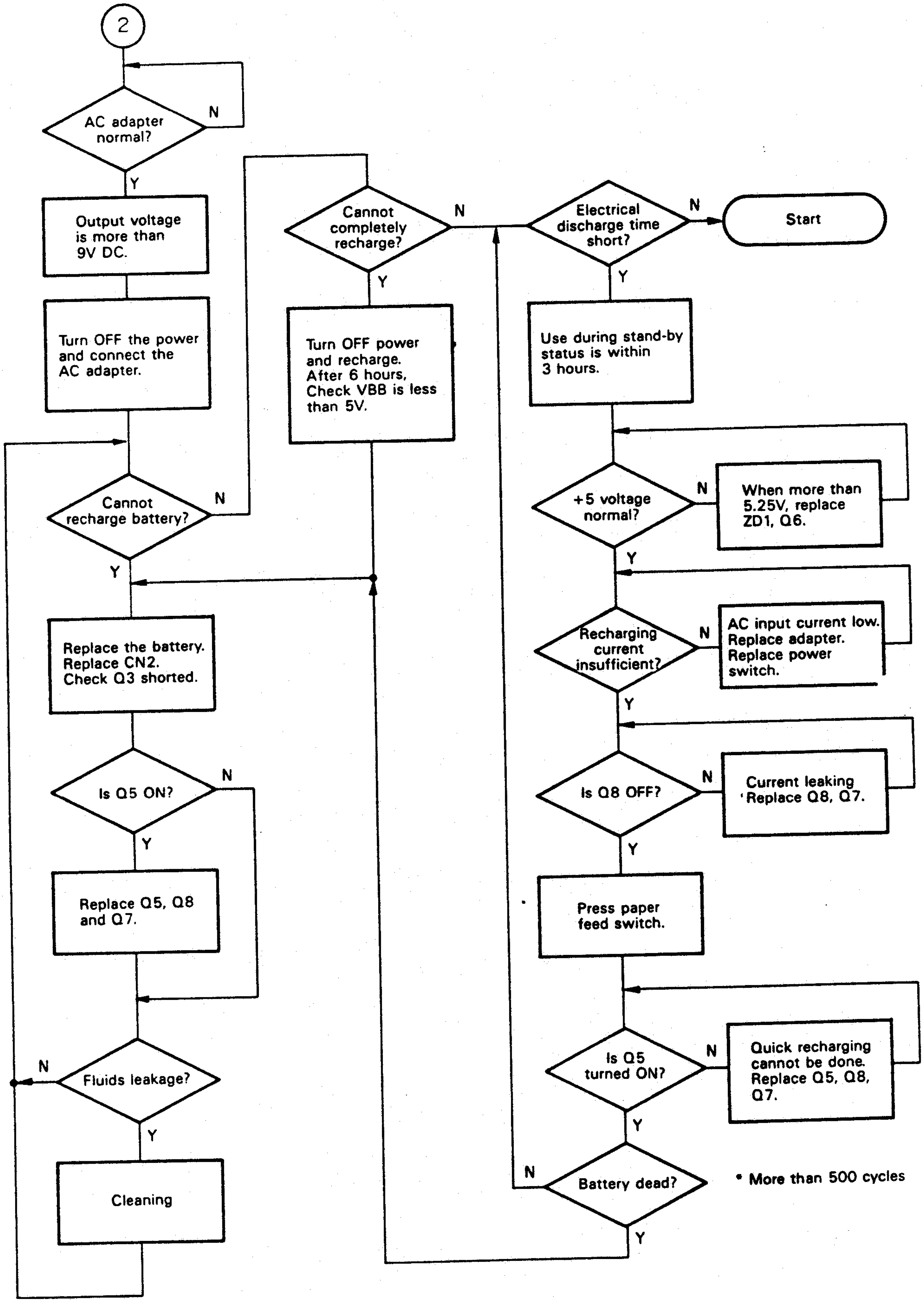

Fig. 5-4 Battery Recharging Circuit Malfunctions

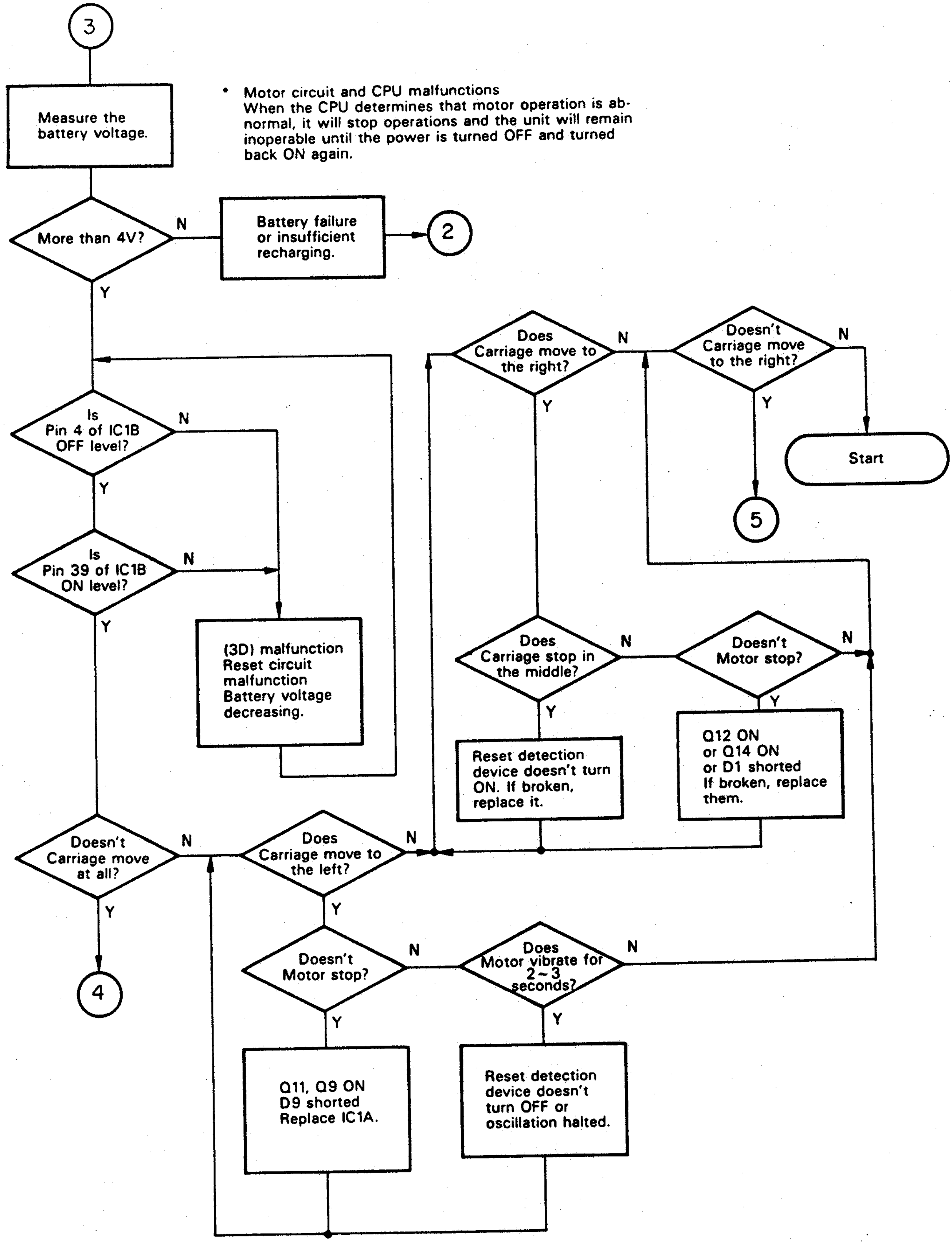

Fig. 5-5 Carriage Operation is Abnormal

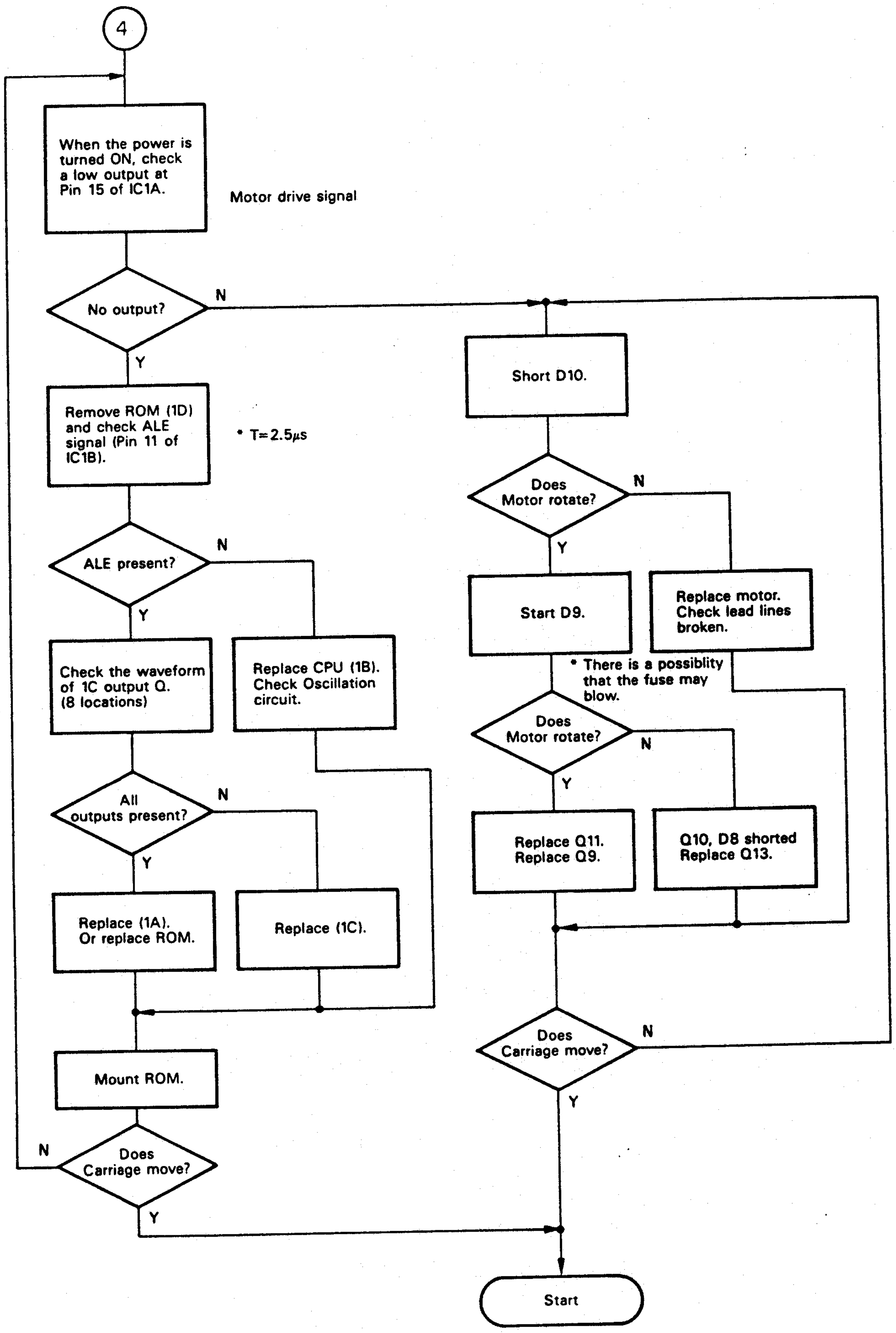

Fig. 5-6 Carriage Does Not Move at All

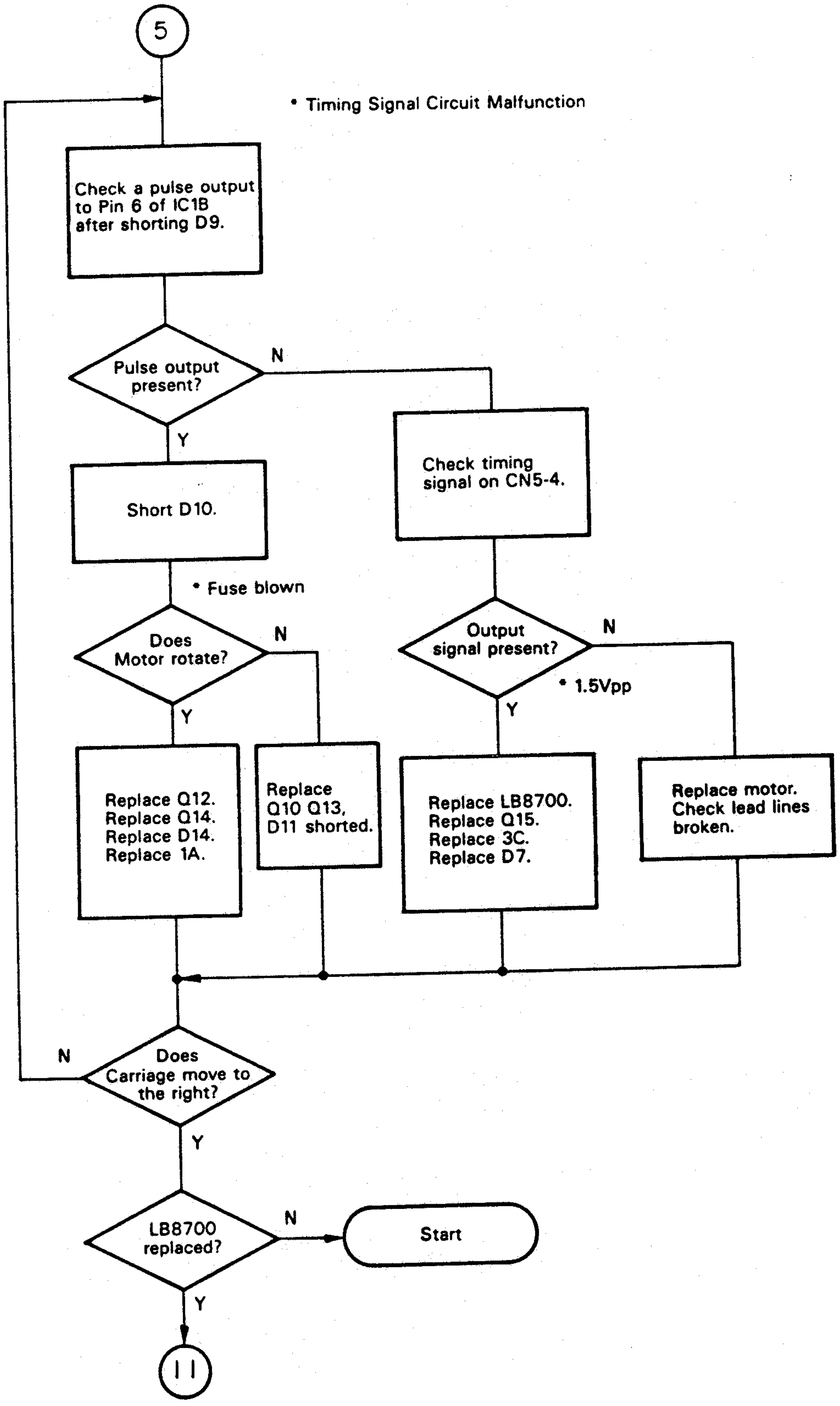

Adjust VR1, VR2 (Refer to Section 4.2)

Fig. 5-7 Carriage Does Not Move to the Right

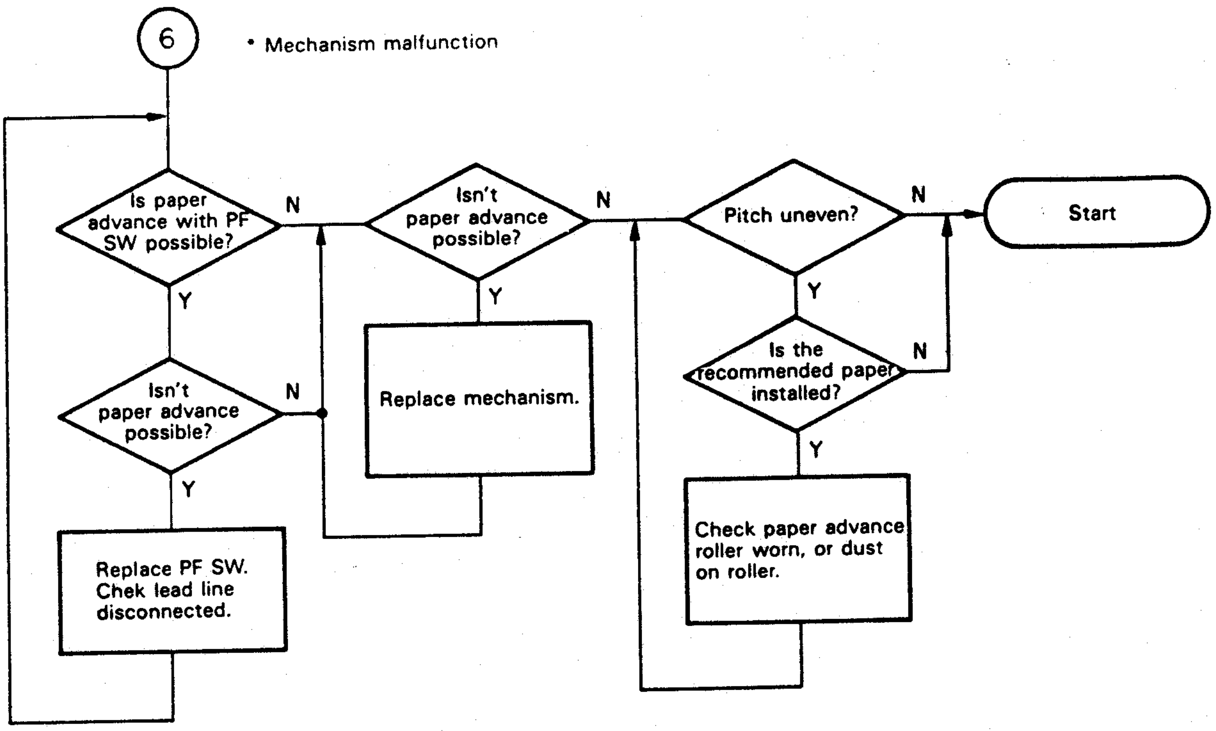

Fig. 5-8 Paper Advance Abnormal

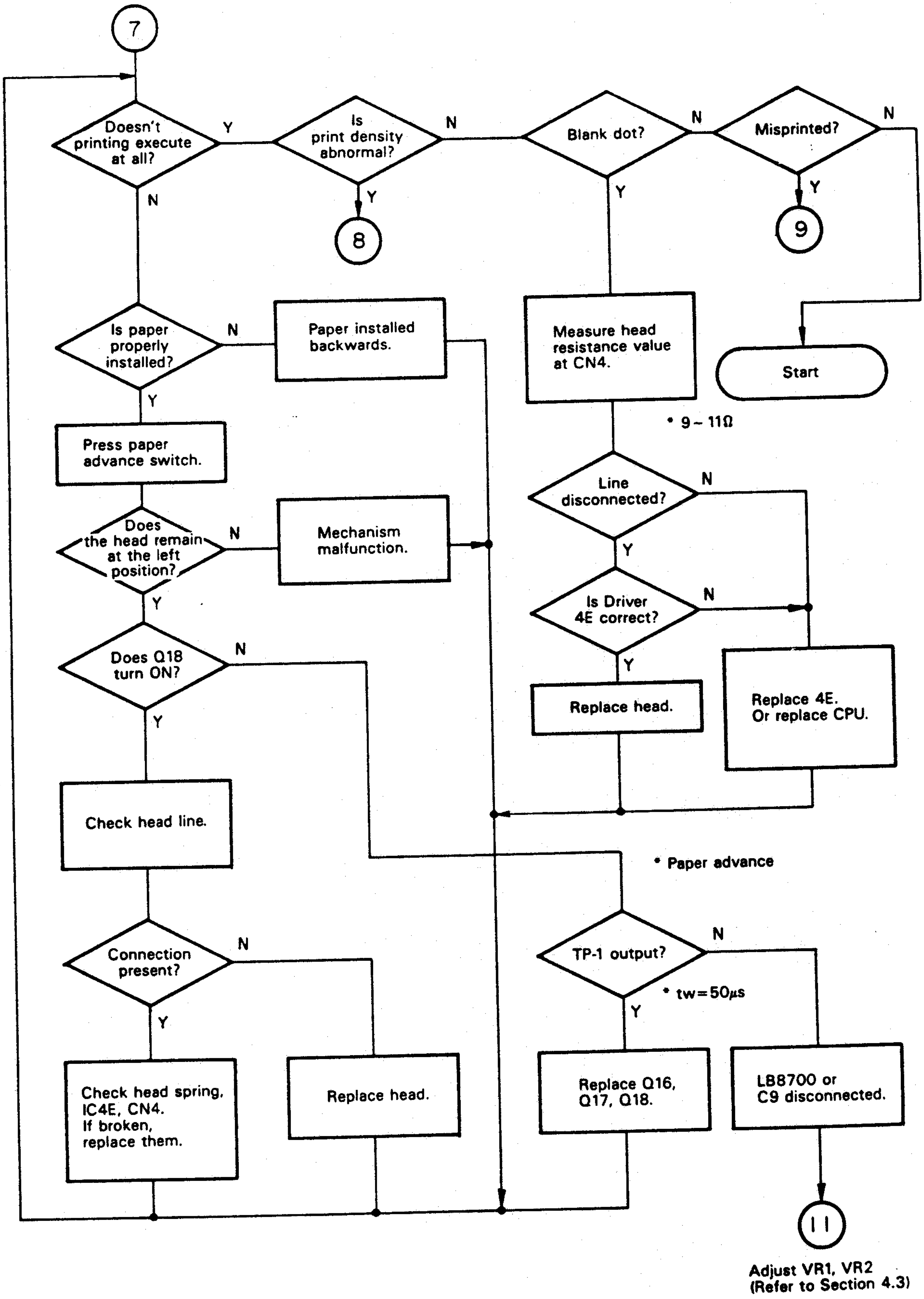

Fig. 5-9 Printing Abnormal

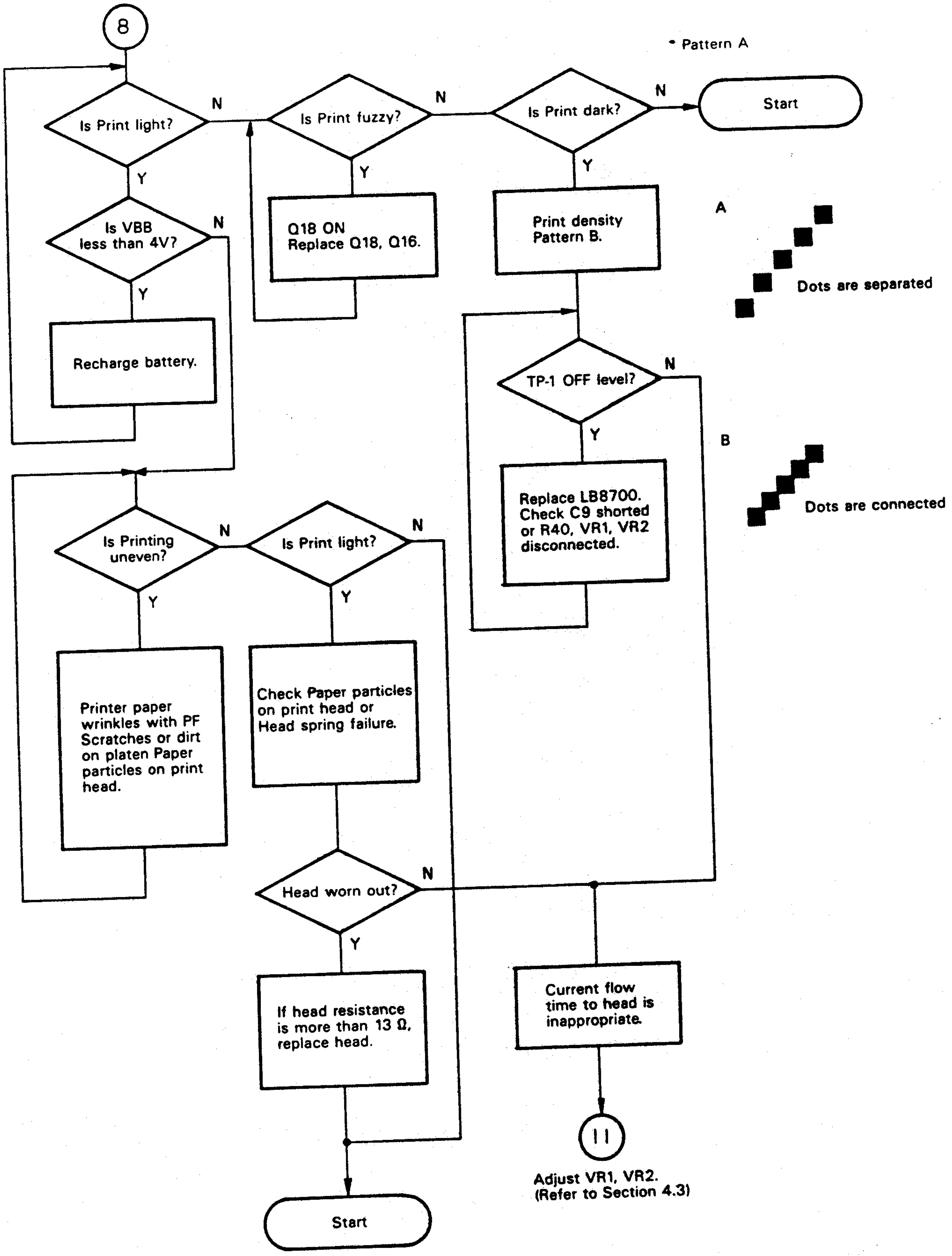

Fig. 5-10 Print Density

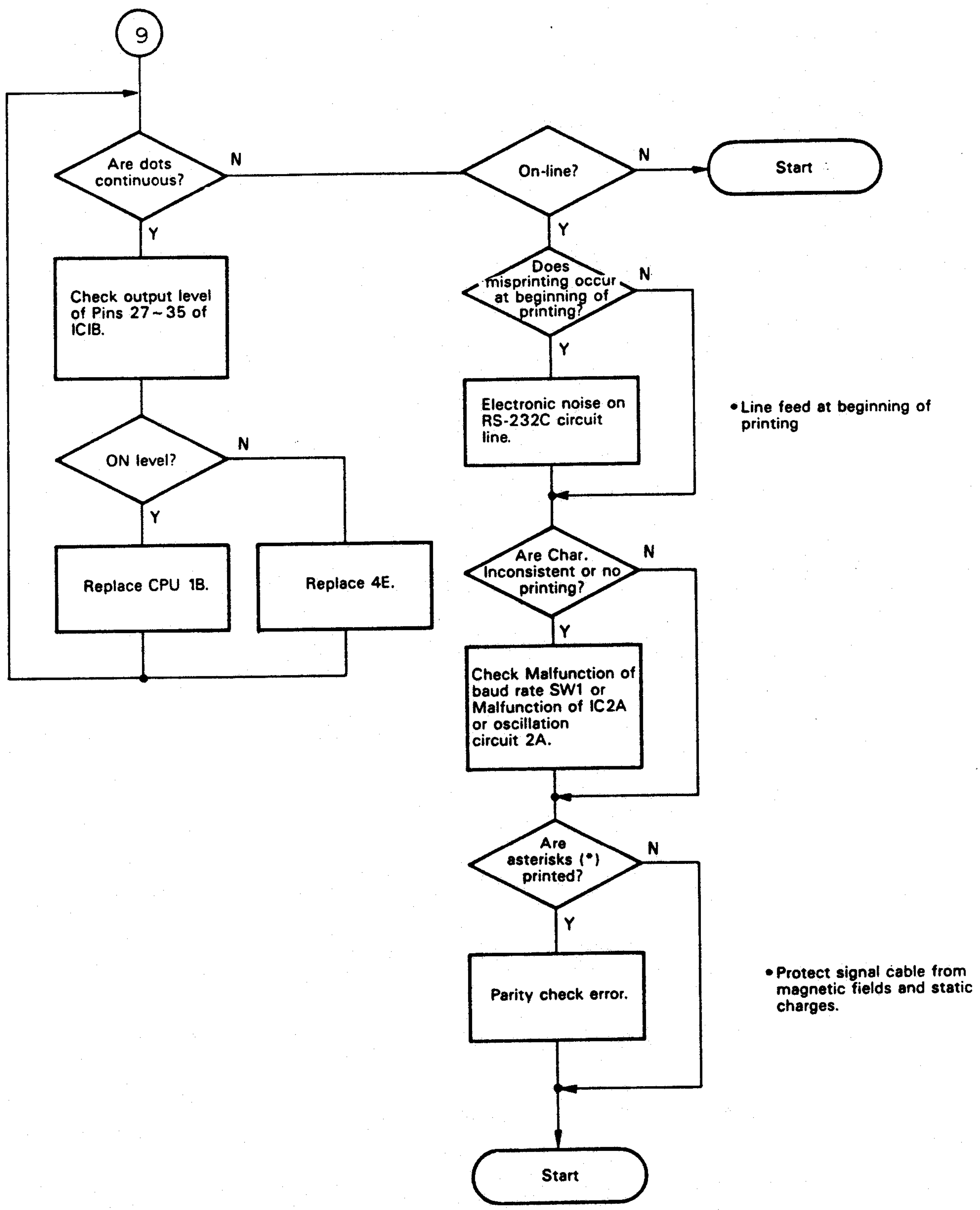

Fig. 5-11 Misprinted Characters

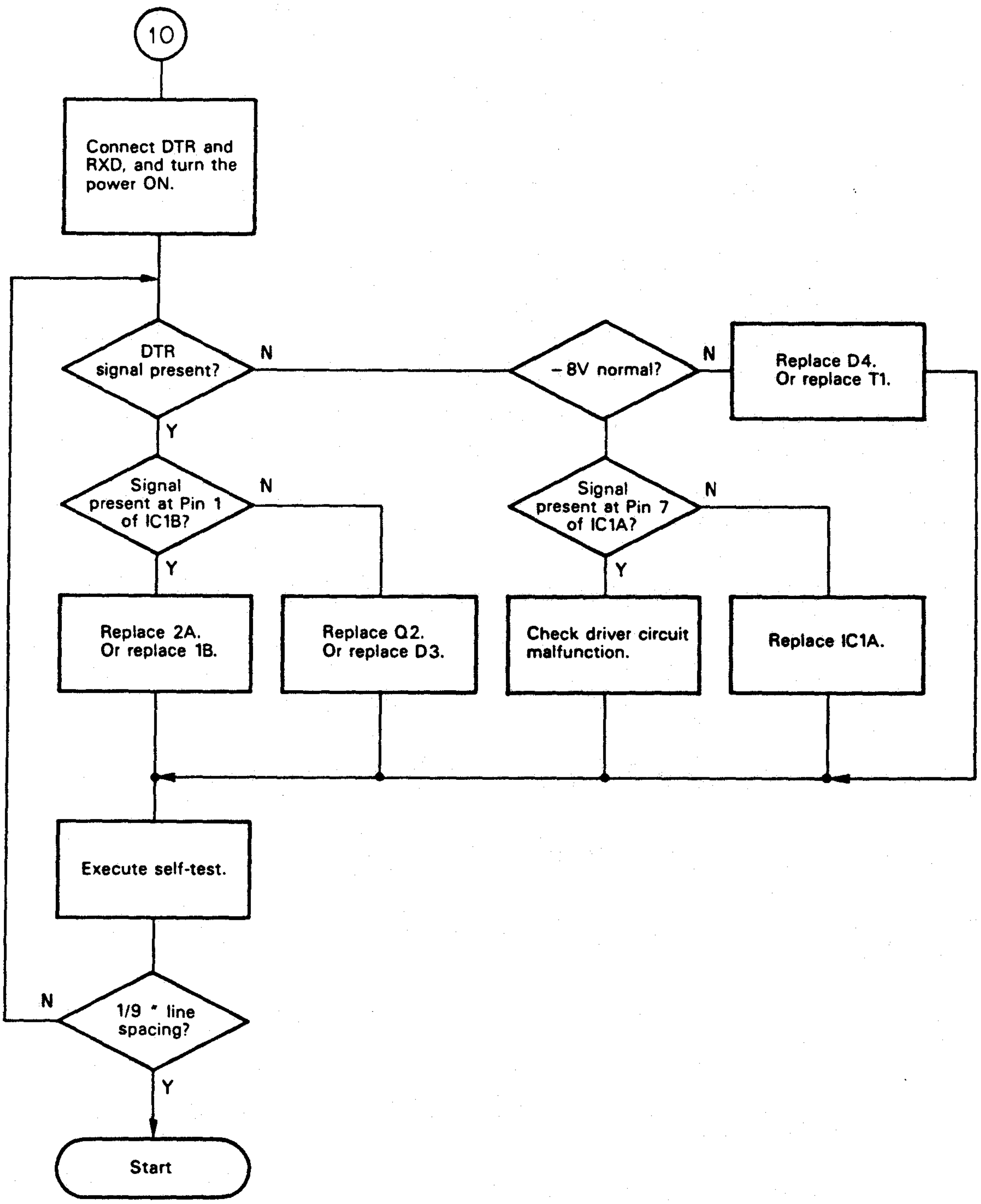

Fig. 5-12 Interface Circuit

NOTE: If the P-40 should be accidentally dropped onto the floor, because of the weight, the printer will fall with the upper case facing down. Even if the outside of the printer appears to be normal and intact, there will be times when the printer will be inoperable. If this should happen, check to see if the ROM IC has come out of it socket on the circuit board.

CHAPTER 6
MAINTENANCE

6.1 Cleaning 6-1
6.2 Maintenance Schedule 6-1
6.3 Maintenance Parts List 6-2

LIST OF TABLES

6-1 Maintenance Schedule 6-1
6-2 AC Adaptor REV. A Temporary 6-2
6-3 Unit Change REV. A Temporary 6-2
6-4 Parts Change Level REV. A Temporary 6-3

The P-40 requires very little maintenance and no lubrication; cleaning and battery or printhead replacement are the only preventive maintenance actions necessary. The technician should clean the printer and check for worn parts whenever the unit is returned for service.

6.1 Cleaning

To remove dust and paper particles from the printer mechanism, remove the upper case, turn the unit over, and tap the bottom of the lower case.

To clean the case, use a cloth moistened with ethyl alcohol. (Do not attempt to clean plastic parts with solvents containing ketones.)

6.2 Maintenance Schedule

Table 6-1 lists components which are considered disposable and describes the conditions under which they should be exchanged.

Table 6-1 Maintenance Schedule

COMPONENT	DESCRIPTION
Thermal Paper	Printer paper is available in 5-roll packages, and should not be exposed to high temperature or humidity. Replace paper which is discolored.
Thermal Printhead	The face of the printhead should be kept clean and free from paper particles. Replace the printhead when the print quality is poor and characters are distorted.
NiCd Batteries	Replace the battery if it cannot be recharged sufficiently to operate at least 2 hours at stand-by.
M-1210 Mechanism	If any component of the M-1210 fails, replace the entire mechanism.

6.3 Maintenance Parts List

Table 6-2 AC Adaptor REV. A Temporary

Voltage (V)	Model	Adapted Country	Code									
100	H00AAJ	Japan	X	5	1	0	6	0	0	0	2	0
120	H00AAA	America, Canada, Taiwan, Korea	X	5	1	0	6	0	0	0	1	0
220	H00AAE	France	Y Y	2 2	0 0	1 1	5 5	1 2	5 4	0 0	0 0	0 0
220	H00AAG1	Germany, around Germany, Sweden, Denmark, Norway	X	5	1	0	6	0	0	0	6	0
220	H00AAG2	South Europe	X	5	1	0	6	0	0	0	9	0
240	H00AAU-A	England	Y X	2 5	0 1	1 0	5 6	1 0	7 0	0 0	0 8	0 0
240	H00AAU-B	Australia, New Zealand	Y X	2 5	0 1	1 0	5 6	1 0	9 0	0 1	0 0	0 0
240	H00AAU2	Hong Kong, Singapore	X	5	1	0	6	0	0	1	0	0

Table 6-3 Unit Change Level REV. A Temporary

Component Parts Name	Code											
Upper Case	Y	5	5	0	0	0	0	0	0	1		
Under Case	Y	5	5	0	0	0	1	0	0	1		
Screw CTB M3×10	B	0	1	2	6	0	1	8	1	1		
Interface Cover	Y	5	5	0	0	0	2	0	0	1		
Power Switch Knob	Y	5	5	0	0	0	5	0	0	1		
Paper Feed Knob	Y	5	5	0	0	0	6	0	0	1		
Upper Case Cover	Y	5	5	0	0	0	8	0	0	1		
Cover with Cutter	Y	5	5	0	0	1	1	0	0	1		
Rubber Foot	Y	5	5	0	0	0	9	0	0	1		
Label for HX/PX	Y	5	5	0	0	1	8	0	0	1		
PWB Unit J2: ON ASCII	Y	5	5	0	2	0	1	0	0	0	0	1
Jumping Wire	Y	5	5	0	2	0	1	0	0	3		
CPU	X	4	0	0	0	8	0	3	9	2		
ROM for Standard P4S5	Y	5	5	0	8	0	1	4	0	1		
ROM for HX/PX P4M1	Y	5	5	0	8	0	0	1	0	2		
M-1210 Mechanism	F	5	5	0	0	0	0	0	1			
Thermal head	F	5	5	0	2	0	1	0	0	0		
Ni-Cd Battery C20RB	Y	3	1	5	5	0	1	0	0	0		
Thermal Paper 5 Rolls	F	5	5	0	4	0	1	0	0	0		

Table 6-4 Parts Change Level REV. A Temporary

	Parts Name	Parts No.	Code									
1	CPU		X	4	0	0	0	8	0	3	9	2
2	CMOS-IC	3C	X	4	6	0	3	0	0	2	0	0
3		1A	X	4	6	0	3	1	7	5	0	0
4		1C, 2A	X	4	6	0	3	3	7	3	0	0
5	IC	4E	X	4	4	0	2	1	2	4	8	0
6		2E	X	4	4	0	2	8	7	0	0	0
7		3D	X	4	4	0	1	6	7	6	1	0
8	DIODE	D1~D5, D7~D15	X	3	2	0	0	1	0	0	7	9
9		ZD1	X	3	3	0	0	0	0	0	7	9
10	TRANSISTOR	Q7, Q9, Q14	X	3	0	0	1	3	4	8	0	0
11		Q4, Q6, Q16	X	3	0	2	1	8	1	5	8	9
12		Q2, Q19, Q20, Q21	X	3	0	2	2	4	5	8	8	9
13		Q15, Q17	X	3	0	2	3	4	0	0	0	9
14		Q8	X	3	0	2	3	4	0	2	0	9
15		Q1	X	3	0	0	1	0	4	8	8	0
16		Q10, Q13, Q18	X	3	0	1	0	6	9	8	9	4
17		Q5	X	3	0	1	0	8	9	2	9	0
18		Q11, Q12	X	3	0	3	0	7	3	4	9	4
19		Q3	X	3	0	3	1	2	0	7	9	2
20	LED		X	3	5	0	2	0	0	1	7	0
21	OSCILLATOR	CR1	X	5	0	4	0	0	0	7	1	0
22	CONDENSER	CM1	X	2	2	9	0	0	3	0	0	0
23		C6	X	2	5	0	2	0	1	0	5	9
24		C3	X	2	0	0	0	0	1	0	1	9
25		C2	X	2	0	0	0	0	3	3	0	9
26		C1	X	2	0	0	1	0	2	2	1	9
27		C4	X	2	0	0	1	0	4	7	0	9
28		C5	X	2	0	0	5	0	0	2	2	9
29		C8	X	2	3	1	0	9	6	8	2	1
30		C10	X	2	3	1	0	9	1	5	3	1
31		C9	X	2	3	1	0	9	2	2	3	1
32		C20	X	2	2	0	2	2	1	0	2	0
33		C13, C14, C15, C17, C19	X	2	2	4	2	2	1	0	3	1
34		C7, C12, C16, C18, C21	X	2	2	4	1	2	1	0	4	1
35	RESISTOR	R12	X	1	5	0	4	4	2	2	0	2
36		R20, R22, R24, R26	X	1	5	0	4	4	1	0	1	2
37		R35, R36	X	1	5	0	4	4	1	2	1	2
38		R34, R47	X	1	5	0	4	4	6	8	1	2
39		R15, R49	X	1	5	0	4	4	1	0	2	2
40		R33	X	1	5	0	4	4	2	2	2	2

	Parts Name	Parts No.	Code									
41			X	1	5	0	4	4	3	3	3	2
42		R31	X	1	5	0	4	4	6	2	2	2
43		R8, R37	X	1	5	0	4	4	6	8	2	2
44		R38	X	1	5	0	4	4	9	1	2	2
45		R3, R4, R7, R11, R18, R435, R46, R48	X	1	5	0	4	4	1	0	3	2
46		R5, R41	X	1	5	0	4	4	1	5	3	2
47		R21, R23, R25, R27, R39, R42	X	1	5	0	4	4	2	2	3	2
48		R30	X	1	5	0	4	4	3	3	3	2
49		R40	X	1	5	0	4	4	6	8	3	2
50		R6, R17, R28, R29, R32	X	1	5	0	4	4	1	0	4	2
51		R10, R14	X	1	5	0	4	4	2	2	1	2
52		R43	X	1	4	2	4	9	4	4	2	2
53		R44	X	1	4	2	4	9	7	1	5	2
54		R1, R16	X	1	3	0	1	1	2	2	0	0
55		RM1, RM2	X	1	1	1	8	8	1	0	4	0
56	VARIABLE RESISTOR	VR2	X	1	8	0	0	4	0	1	7	0
57		VR1	X	1	8	0	0	4	0	1	8	0
58	TRANSFORMER	T1	Y	5	5	0	2	0	1	0	0	2
59	FUSE	FUSE	X	5	0	2	0	1	3	0	2	0
60	SWITCH	SW2	X	6	2	0	1	0	0	5	5	0
61		PFSW	X	6	2	0	1	0	0	5	7	0
62		SW1	X	6	2	0	4	0	0	8	5	1
63	IC SOCKET	ID	X	6	3	0	1	1	2	8	3	0
64		IB	X	6	3	0	1	1	4	0	3	0
65	JUMPING WIRE	J3~J5	X	5	5	0	2	0	1	0	0	3
66	CONNECTOR	CN1	X	6	0	0	5	7	0	6	2	0
67		CN2	X	6	0	0	5	6	0	3	0	0
68		CN3	X	6	0	0	7	0	0	9	0	0
69		CN4	X	6	0	0	6	1	1	2	1	0
70		CN5	X	6	0	0	1	3	0	6	0	0
71		TP	X	6	0	0	3	2	0	6	0	0
72	CHECKER	SC-87 BOARD										

CHAPTER 7
P-40 LEASED LINE

7.1 HX And PX Specifications 7-1

LIST OF FIGURES

7-1 Text Mode 7-2
7-2 Bit Image 7-2
7-3 80/72 Columns Setting 7-3
7-4 Paper Feed Pitch Setting 7-3

7.1 HX And PX Specifications

For the EPSON PORTABLE COMPUTER series (HX-20, PX-8, PX-4), a special version of the P-40S printer is available. As the outward appearance of this model is the same as the standard model, the special version unit has a identifying label for HX-20/PX-8 attached to it.

The following types of connection cables are available:

HX-20	Cable #736	Length: approx. 1m
PX-8/PX-4	Cable #723	Length: approx. 1m

The P-40 special type printer functions normally when connected to the RS-232C connector of the host computer.

Differences between the special and the standard types:

- The character codes of the special type are set for the HX or PX specifications.
- The international character set can be designated for 11 countries.
- The baud rate is set to 4800 B.P.S.
- The specifications of the switch setting have been changed: SW No. 7 and SW No. 8 have new functions.

  The ROM has been changed. (P4M1)

Switch Setting

SW No. 8 selects the text mode, and SW No. 7 selects the bit image mode.

SW No. 7	ON:	Standard specification
	OFF:	This specification allows position up to 480 dot position
SW No. 8	ON:	Standard specification (40-column specification)
	OFF:	80-column specification

This relationship is illustrated in Fig. 7-1 and Fig. 7-2. For the standard version specifications, please refer to Chap. 2.

SW No. 5 and SW No. 6 set the bit rates.

Bit rate	SW 5	SW6
300	ON	ON
1200	ON	OFF
2400	OFF	ON
4800	OFF	OFF

SW No. 1 to SW No. 4 are set in the same way as the standard version.

Control Codes (80-Column Specification)

In the HX and PX specifications, the condensed 80 columns/line mode is the standard.
If the condensed mode (of the standard version) is enlarged, the normal mode is enabled.
The emphasized mode means that the normal mode is emphasized.
For the bit image mode, only the double density mode can be designated.

Text mode (When SW No. 8 is OFF)

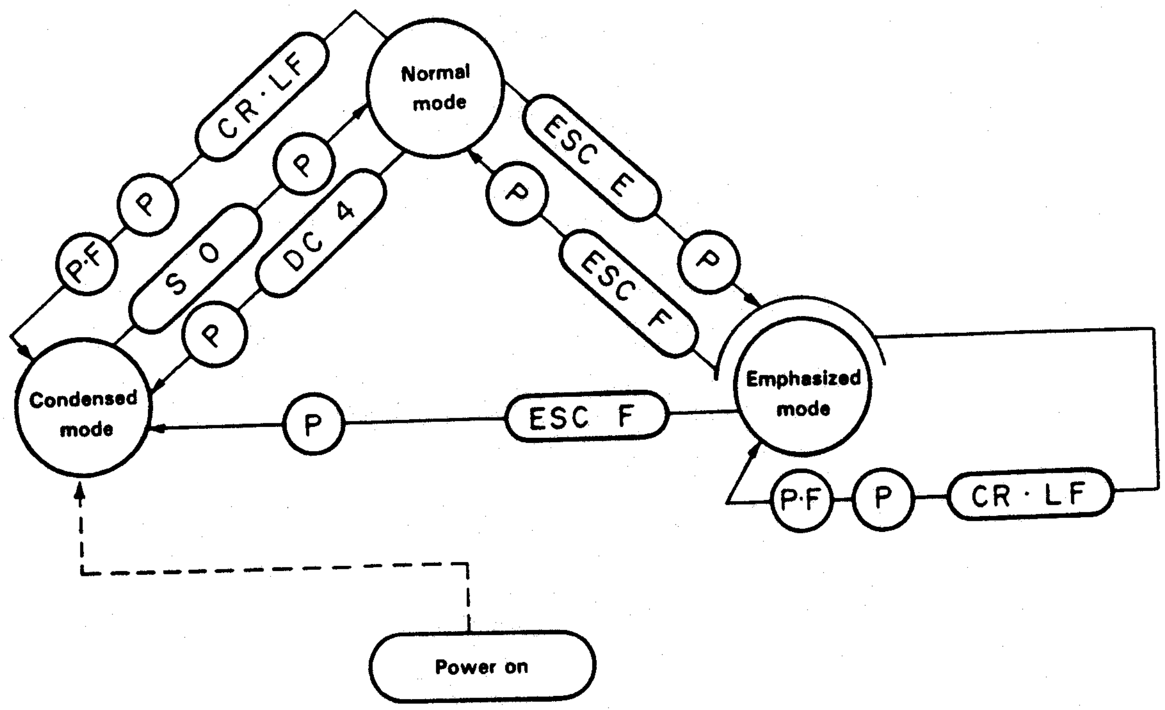

Fig. 7-1 Text Mode

Bit image mode (When SW No. 7 is OFF)

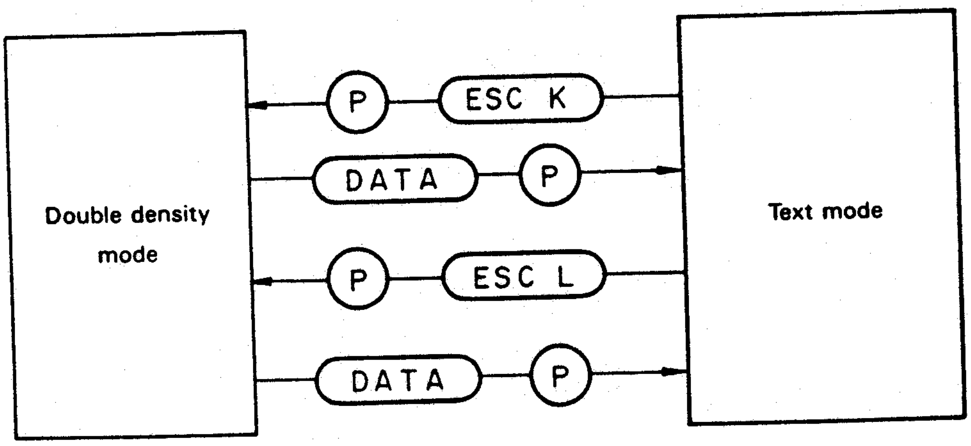

Fig. 7-2 Bit Image

80/72 Disits Setting (If SW No. 8 is off.)

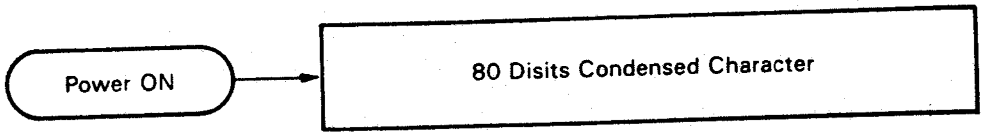

Fig. 7-3 80/72 Columns Setting

Paper Feed Pitch Setting

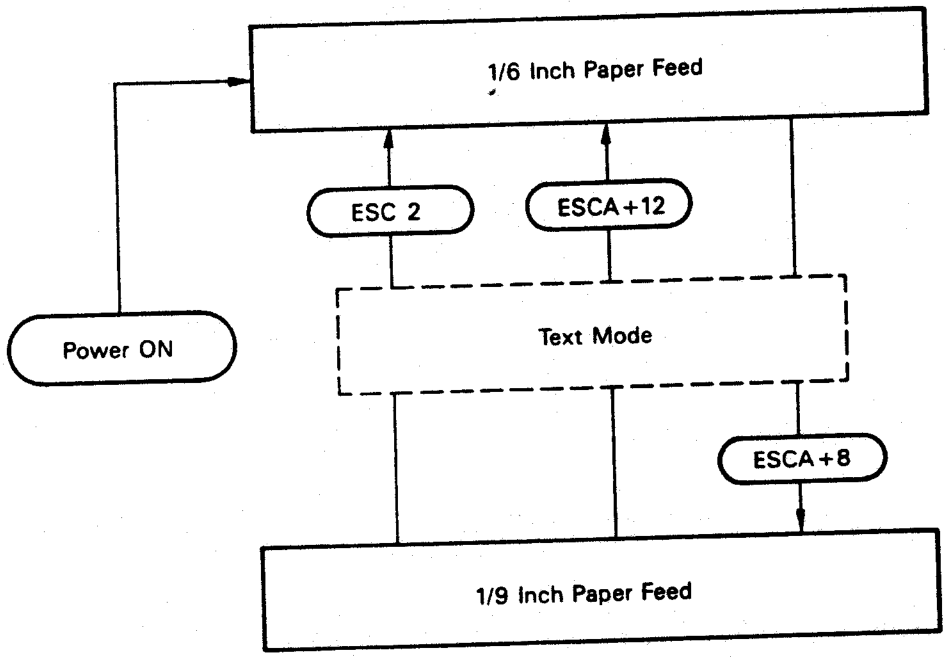

Fig. 7-4 Paper Feed Pitch Setting

Operation for each model is explained below:

(1) PX-8

As the printer is set for 40 columns/line, the printer can be used in the same manner as the standard type model. However, the bit image printing can be done only up to the 480 dot position. When SW No. 8 is set to the OFF position for 80 columns/line, the printer is set to the special version specifications.

- To print the [LIST] of programmes stored in memory:
  Print out will be in 40 columns/line
  To print the list in 80 columns/line, set SW No. 8 to the OFF position.
- Hard copy from the screen: [CTRL] + [PF5]
  A hard copy of the screen image will be printed in the text mode. No bit image printing is possible.
  To print a hard copy of the screen, set SW No. 8 to the OFF position.

(2) PX-4

Set the switches in the following manner:

SW No. 8: ON; SW No. 7: ON

- To print LIST: [LLIST]
  Print out will be in 40 columns/line
  To print the list in 80 columns/line, set SW No. 8 to the OFF position.
- Hard copy of the screen: [CTRL] + [PF5]
  The hardcopy of the screen will be printed in the bit image mode.

(3) HX-20

Set the switches in the following manner:

SW No. 8: ON; SW No. 7: ON

- To print LIST: [LIST "COM:"]

APPENDIX DIAGRAM

APPENDIX A Component Layout 7-7
APPENDIX B Circuit Diagram 7-8
APPENDIX C Model-1210 Disassembled Diagram 7-9

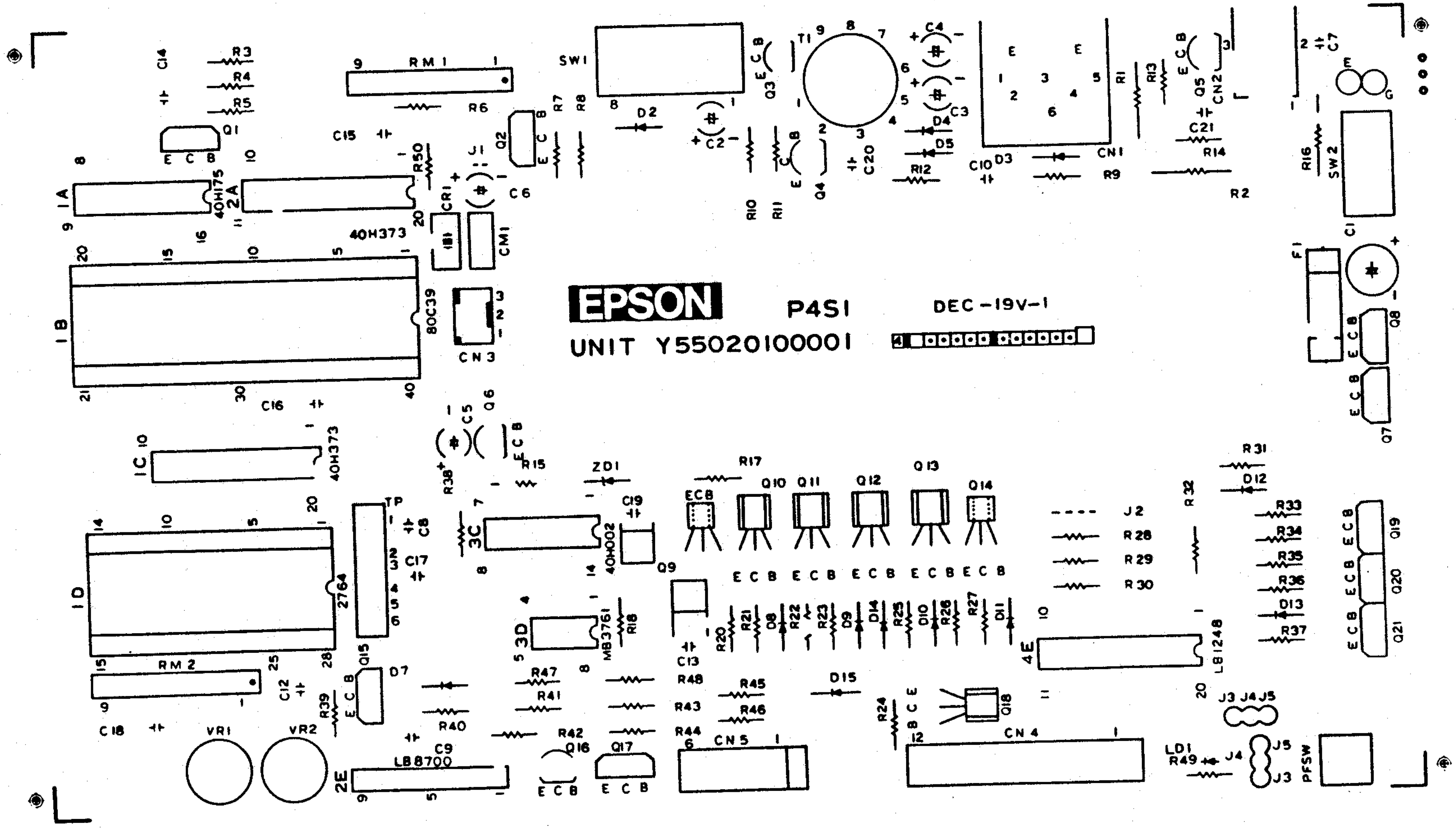

APPENDIX A Component Layout

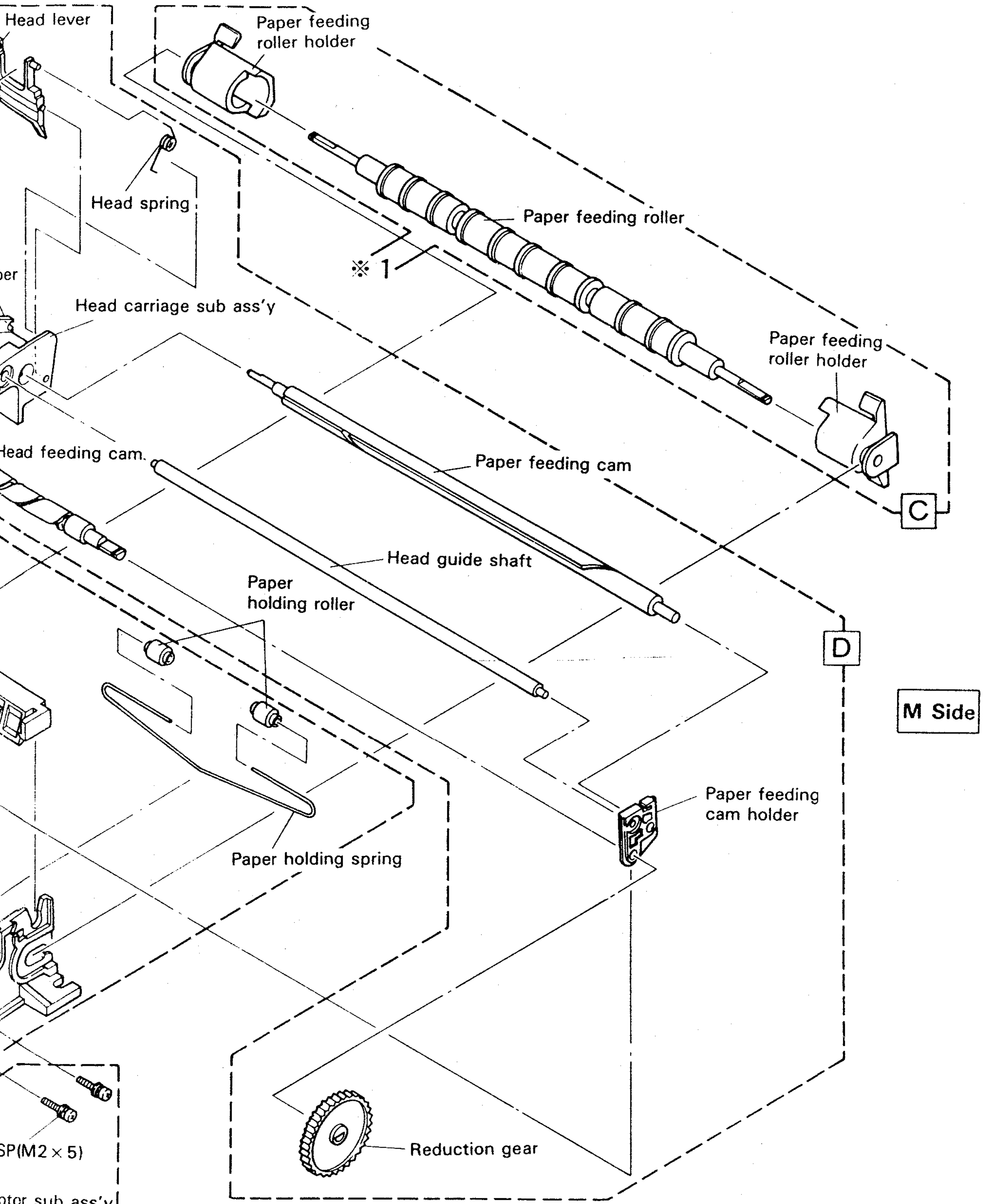

Assembly Block

A: Main body (Frame ass'y)

B: Driving mechanism components (Motor ass'y)

C: Paper feed components (Paper feeding roller ass'y +

D: Printing mechanism transmission components (Head carriage ass'y, head ass'y)

APPENDIX C Model-1210 Disassembled Diagram

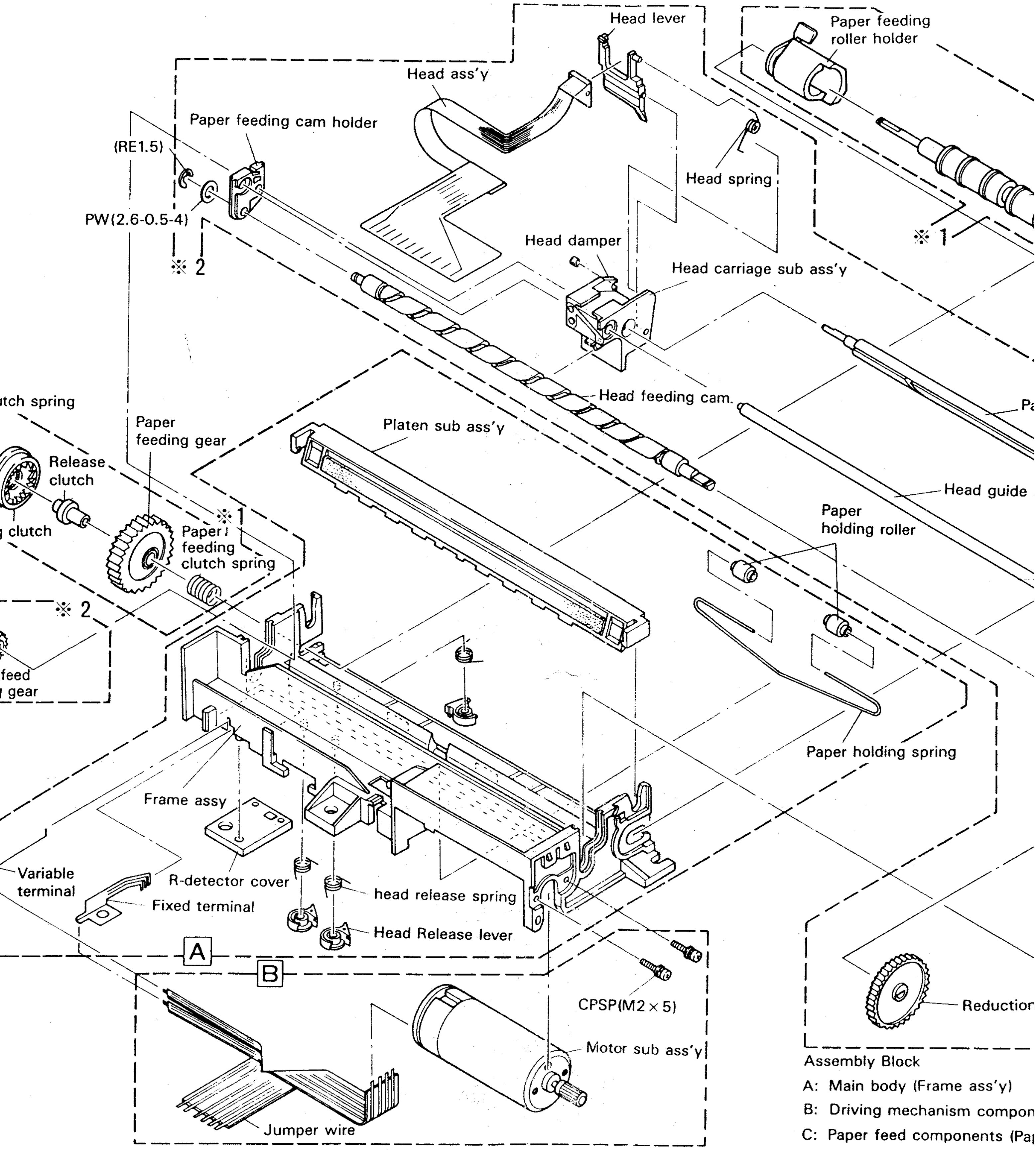

Assembly Block
A: Main body (Frame ass'y)
B: Driving mechanism compon
C: Paper feed components (Pa
D: Printing mechanism transmi

APPENDIX C Mo

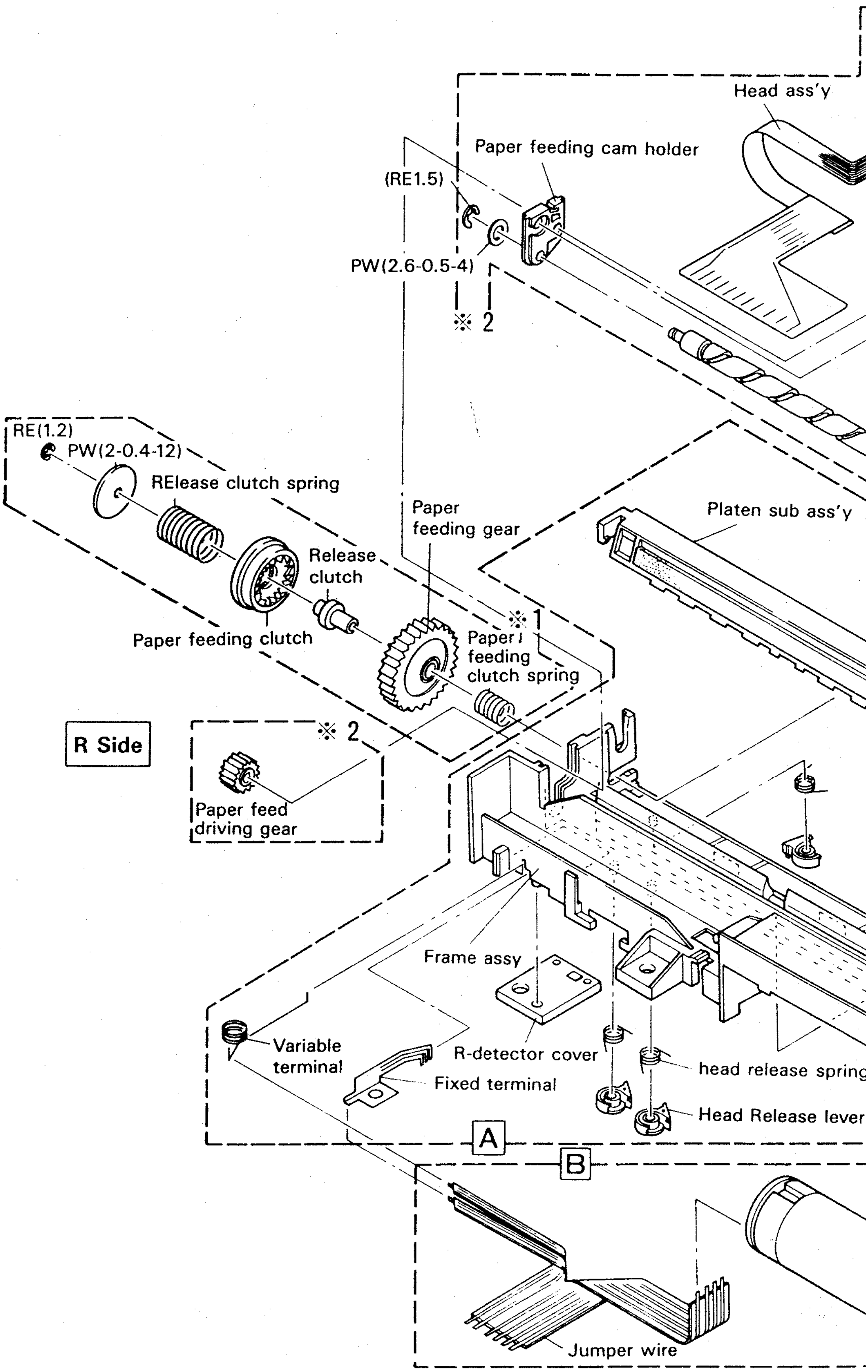
Head ass'y
Paper feeding cam holder
(RE1.5)
PW(2.6-0.5-4)
※ 2
RE(1.2)
PW(2-0.4-12)
RElease clutch spring
Paper feeding gear
Platen sub ass'y
Release clutch
Paper feeding clutch
※ 1
Paper feeding clutch spring
R Side
※ 2
Paper feed driving gear
Frame assy
R-detector cover
Variable terminal
Fixed terminal
head release spring
Head Release lever
A
B
Jumper wire